Raven

Premier Technology

Gottlieb™ PINBALL

INSTRUCTION MANUAL

RAVEN

(GAME #702)

INSTRUCTION MANUAL

Applicable for all games.

TABLE OF CONTENTS

		PAGE(S)
I.	INSTALLATION	1
II.	INITIALIZATION	2
III.	GAME OPERATION	2,3
IV.	GAME PLAY AND SCORING	4-5
V.	SOUND	6
VI.	GAME ADJUSTMENTS	6,7
VII.	BOOKKEEPING AND SELF TEST	8-12
VIII.	THEORY OF OPERATION	13-16
IX.	GENERAL INFORMATION	17,18
X.	WIRING AND SCHEMATIC DIAGRAMS	19-46
XI.	PARTS INFORMATION	47-52

RAVEN

GAME PROMS:
702/PROM 1
702/PROM 2

SOUND PROMS:
702/DROM 1
702/YROM 1

Premier Technology

759 INDUSTRIAL DRIVE
BENSENVILLE, IL 60106
TELEX 215009 PRMR UR

FOR SERVICE, CALL (312) 350-0400

SUPPLEMENTAL ADDENDUM

ATTACHED TO AND A PART OF ALL SYSTEM 80B ALPHANUMERIC DISPLAY GAME INSTRUCTION MANUALS

DISPLAY BOARD(A4)

1. THE ALPHANUMERIC DISPLAY BOARD(A4) IN THIS GAME MAY BE DIFFERENT THAN THE ONE AS ILLUSTRATED ON PAGE(S) 34 AND 35-36.

2. THE DIFFERENT DISPLAY BOARD (A4), PART NO. MA-644F, CONTAINS DISPLAYS DS1 AND DS2, PART NOS. XO-870.

3. THE DISPLAY BOARDS AS AN ASSEMBLY ARE INTERCHANGEABLE; HOWEVER, THE DISPLAY(S) DS1 AND DS2 ARE NOT INTERCHANGEABLE FROM ONE ASSEMBLY TO ANOTHER.

4. TO QUICKLY DETERMINE WHICH DISPLAY BOARD (A4) IS USED IN THIS GAME, OBSERVE THE LOCATION OF THE VACUUM EXHAUST TIP.

FIGURE 1A. DISPLAY BOARD (A4), (MA-644), DISPLAY(S) XO-840
FIGURE 1B. DISPLAY BOARD (A4), (MA-644F), DISPLAY(S) XO-870

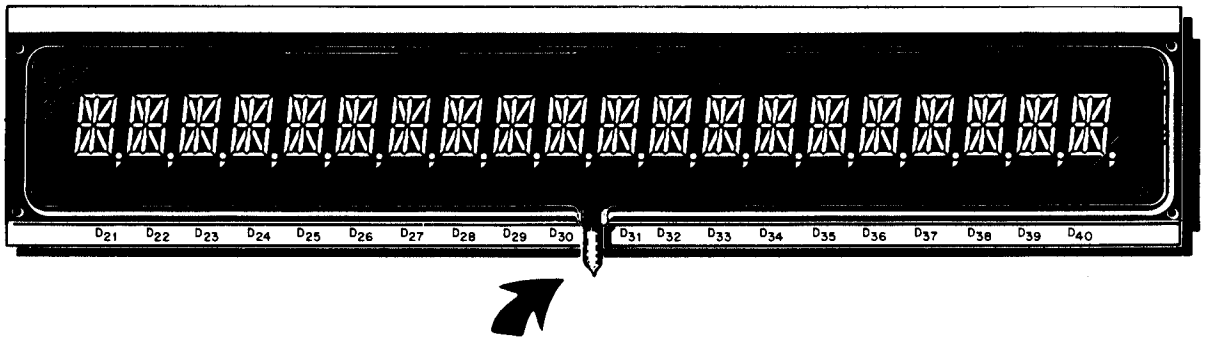

FIGURE 1A.

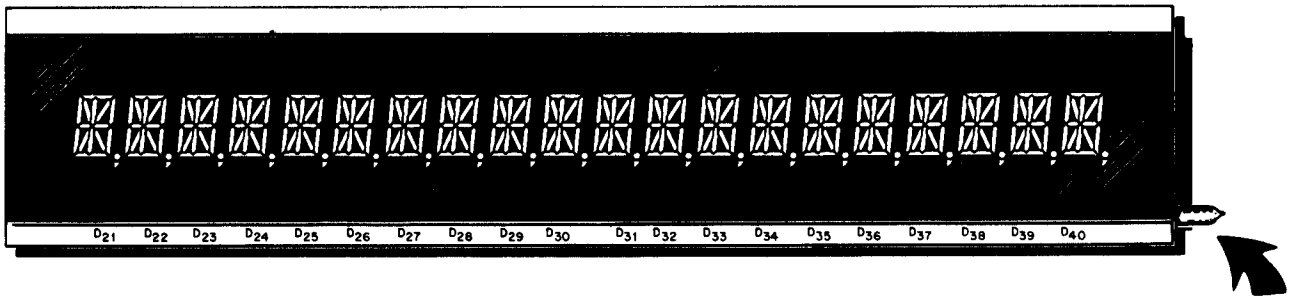

FIGURE 1B.

5. THE DIFFERENT DISPLAYS, XO-840 AND XO-870, ARE ELECTRICALLY EQUIVALENT. HOWEVER, THE PINOUT NUMBERING SEQUENCES ARE DIFFERENT. FIGURE 2 ILLUSTRATES THE SCHEMATIC PORTION OF MA-644F UTILIZING THE XO-870 DISPLAYS.

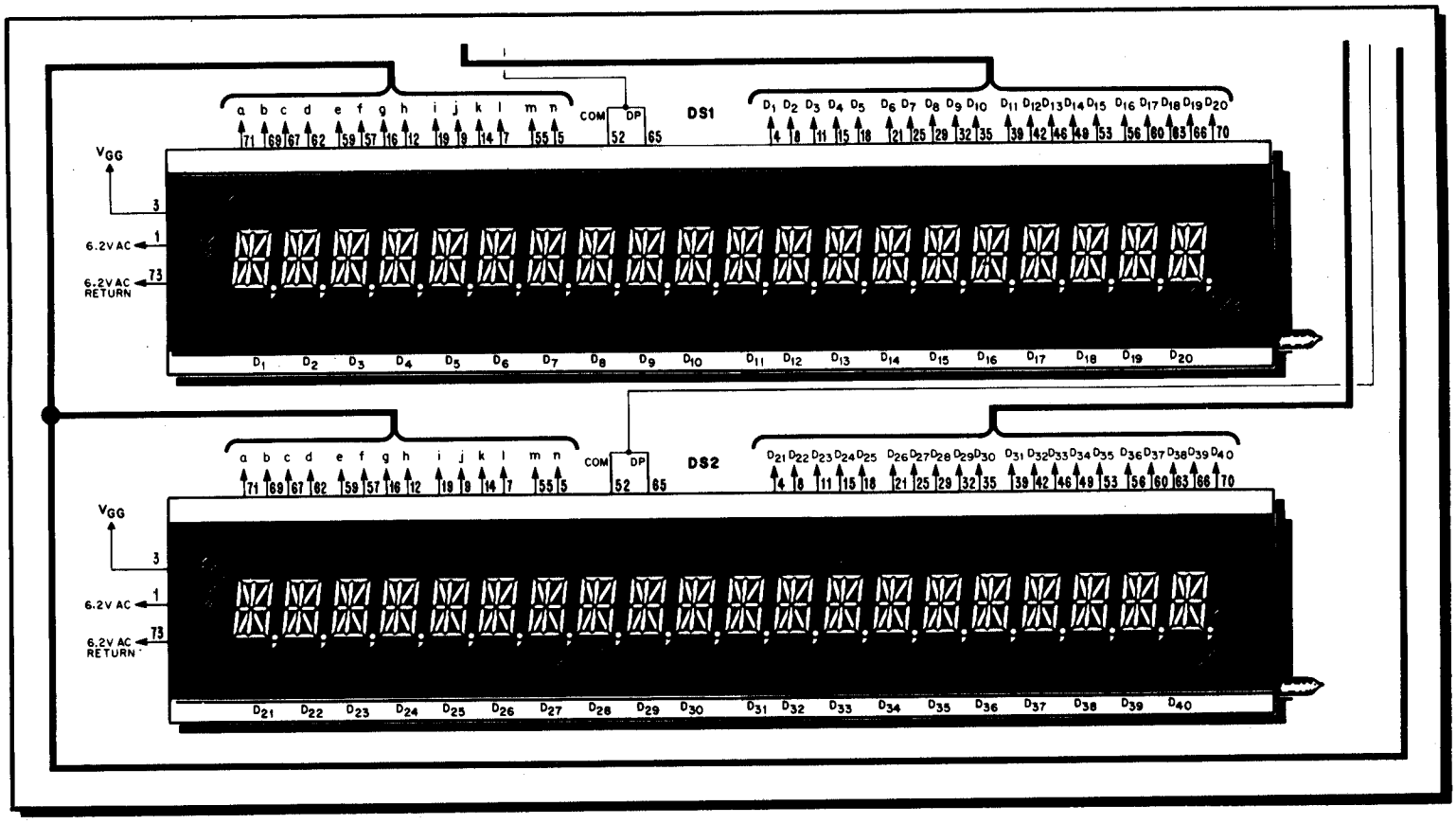

FIGURE 2.

SYSTEM 80B OVERVIEW

System 80B contains three new circuit boards. These are the Alphanumeric Display, the Power Supply, and the Control Board Piggyback which is attached to the Control Board. The Alphanumeric Display takes the place of the Four and Seven Digit Displays used in System 80A games. The new Power Supply takes the place of the System 80A Power Supply. The Control Board Piggyback takes the place of ROMS (U2-U3) and game Prom (PROM 1) used in System 80A games.

Some of the new features of System 80B are:

1) Capability to display messages.
2) Enhanced bookkeeping and self-test.
3) Players can enter their initials if they achieve a high score.
4) Top five high scores are displayed in the attract mode.

"**WARNING:** This equipment generates, uses, and can radiate radio frequency energy and if not installed and used in accordance with the instructions manual, may cause interference to radio communications. It has been tested and found to comply with the limits for a Class A computing device pursuant to Subpart J of Part 15 of FCC Rules, which are designed to provide reasonable protection against such interference when operated in a commercial environment. Operation of this equipment in a residential area is likely to cause interference in which case the user at his own expense will be required to take whatever measures may be required to correct the interference."

A-22670

I. INSTALLATION

A. SET-UP

1. Bolt the legs to the cabinet.

2. Lift lightbox into an upright position. Be sure none of the cables are crimped in between the lightbox and cabinet.

3. Engage the snap in the rear of the lightbox to the cabinet.

4. To remove the lightbox backglass and gain servicing access to the electronics panel, fluorescent lamp assembly, speaker and the alphanumeric display board, proceed as follows:

   Unlock the lightbox, grasp the backglass lift trim, lift the backglass up and out carefully and set aside.

   To remove the speaker/alpha-numeric display panel, grasp

B. CHECK-OUT

1. Check that all cables are clear of moving parts.

2. Check for any loose wires.

3. Check switches for loose solder or other foreign matter.

4. Be certain all fuses are firmly seated.

5. Check transformer for any foreign matter across terminals.

6. Be sure that the Transformer Panel power input connector A12J7, corresponds to the supply voltage.

7. Check the setting of the normally open tilt switch on the underside of the playfield. One blade should be free-floating

II. INITIALIZATION

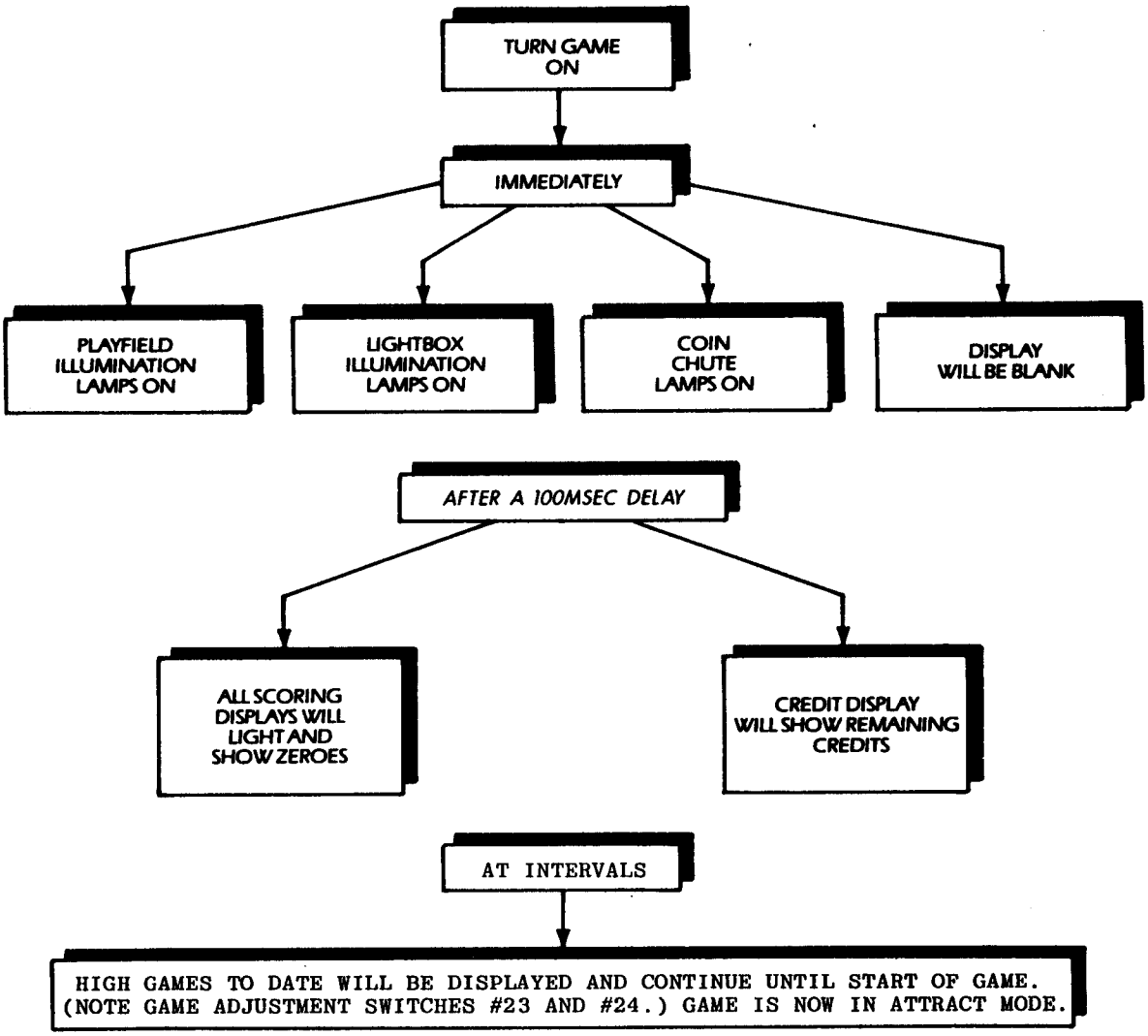

III. GAME OPERATION

A. GAME START

The ball must be in the ball return trough to start a game.

1. Insert coins into coin chute.
   a. Coin chute tune is played.
   b. Total credits are displayed in the center of the lower display.

2. Press Credit Button to start game.
   a. Credit tune is played.
   b. Total credits displayed decrease by one.

3. All playfield features reset.

4. The first player score display flashes two zeros.

B. FIRST PLAYER

1. First player's score display flashes two zeros.

2. The other player's displays are now blank.

3. The ball-in-play is displayed in the center of the upper display.

4. When the ball enters the outhole, any bonus earned is scored.

C. ADDITIONAL PLAYERS

1. Additional players are indicated by two zeros (not flashing) in each corresponding player's display.

2. After the maximum number of players are added, or no more credits remain, the Credit Button has no effect.

3. Additional players can be added anytime during the first player's first ball in play.

D. EXTRA BALLS

1. When the SHOOT AGAIN lamp is lit, neither the player-up nor the ball-in-play changes when the ball enters the outhole.

2. Only one extra ball per ball-in-play is given.

E. TILT MODE

1. Tilting the game results in a loss of ball in play.

2. When the game is tilted, all the playfield lamps go off.

3. All accumulated bonus and bonus multipliers are lost.

F. SLAM MODE

1. If the normally closed slam switch (located inside front door) is opened, the entire game is ended for all players.

2. The entire switch matrix is inactive for three seconds.

3. If the match feature exists (dependent on Switch #26), a replay can be won even if the game is slammed.

4. Game returns to the attract mode.

G. GAME OVER

1. A random match number appears in the ball-in-play display. If this number matches the last two digits in any player's score, a replay (dependent on SWITCH #26) is awarded.

2. The High Games To Date are periodically displayed, dependent on Switches #23 and #24. When the Highest Game To Date is beaten, an award (dependent on Switches #23 and #24) is given.

3. All of the drop targets will reset (when used).

IV. GAME PLAY AND SCORING

HOW TO PLAY

TOP ROLLOVERS

- SCORE 1000 UNLIT.
- SCORE 5000 AND ADD BONUS WHEN LIT.
- COMPLETING THE SEQUENCE ADVANCES THE MULTIPLIER, LOWERS THE RAMP, AND RESETS THE SEQUENCE

TOP SPOT TARGETS

- SCORE 1000 UNLIT.
- SCORE 10,000 AND ADD BONUS WHEN FLASHING.
- COMPLETING SEQUENCE STARTS LAMPS STROBING AND LIGHTS SPECIAL IF THE CORRECT NUMBER OF SNIPERS HAVE BEEN HIT (BASED ON SWITCH #32).
- SCORE 10,000, ADD BONUS, LOWER RAMP, AND RESET SEQUENCE WHEN LIT WHILE STROBING.
- AWARD SPECIAL WHEN LIT WHILE STROBING IF SPECIAL IS LIT.
- (5 BALL) SCORE 500 UNLIT.
- (5 BALL) SCORE 5000 WHEN FLASHING.

BOTTOM SPOT TARGETS

- SCORE 1000 UNLIT.
- SCORE 10,000 AND ADD BONUS WHEN FLASHING.
- COMPLETING TARGET SEQUENCE (BASED ON SWITCH #31) RESETS A RANDOM SNIPER.
- SCORE 10,000, ADD BONUS, ADVANCE EXTRA BALL LAMPS, AND RESET SEQUENCE WHEN LIT WHILE STROBING.
- AWARD EXTRA BALL WHEN "EXTRA" AND "BALL" LAMPS ARE LIT.
- (5 BALL) SCORE 500 UNLIT.
- (5 BALL) SCORE 5000 WHEN FLASHING.

ROLLOVER DROP TARGETS (SNIPERS)

- SCORE 50,000 AND START STROBING THE BOTTOM SPOT TARGET LAMPS.

LEFT AND RIGHT SIDE ROLLOVERS

- SCORE 50,000.
- ADVANCE MULTIPLIER, RAISE THE RAMP, AND LIGHT OPPOSITE ROLLOVER WHEN LIT.

IV. GAME PLAY AND SCORING

RIGHT FLIPPER SWITCH

- ROTATE TOP ROLLOVER LAMPS.

ROLLUNDER AND ROLLOVER BUTTON

- SCORE 3000.

SPINNER

- SCORE 1000 UNLIT.
- SCORE 10,000 WHEN FLASHING.
- RUN HELICOPTER MOTOR UNTIL SPINNER STOPS.

LEFT AND RIGHT RETURN ROLLOVERS

- SCORE 1000 AND FLASH SPINNER FOR A TIME PERIOD.

LEFT AND RIGHT OUTSIDE ROLLOVERS

- SCORE 10,000.

POP BUMPERS

- SCORE 1000 AND TOGGLE LEFT AND RIGHT SIDE ROLLOVER LAMPS.
- (5 BALL) SCORE 500.

RUBBER SWITCHES

- SCORE 30 AND TOGGLE LEFT AND RIGHT SIDE ROLLOVER LAMPS.

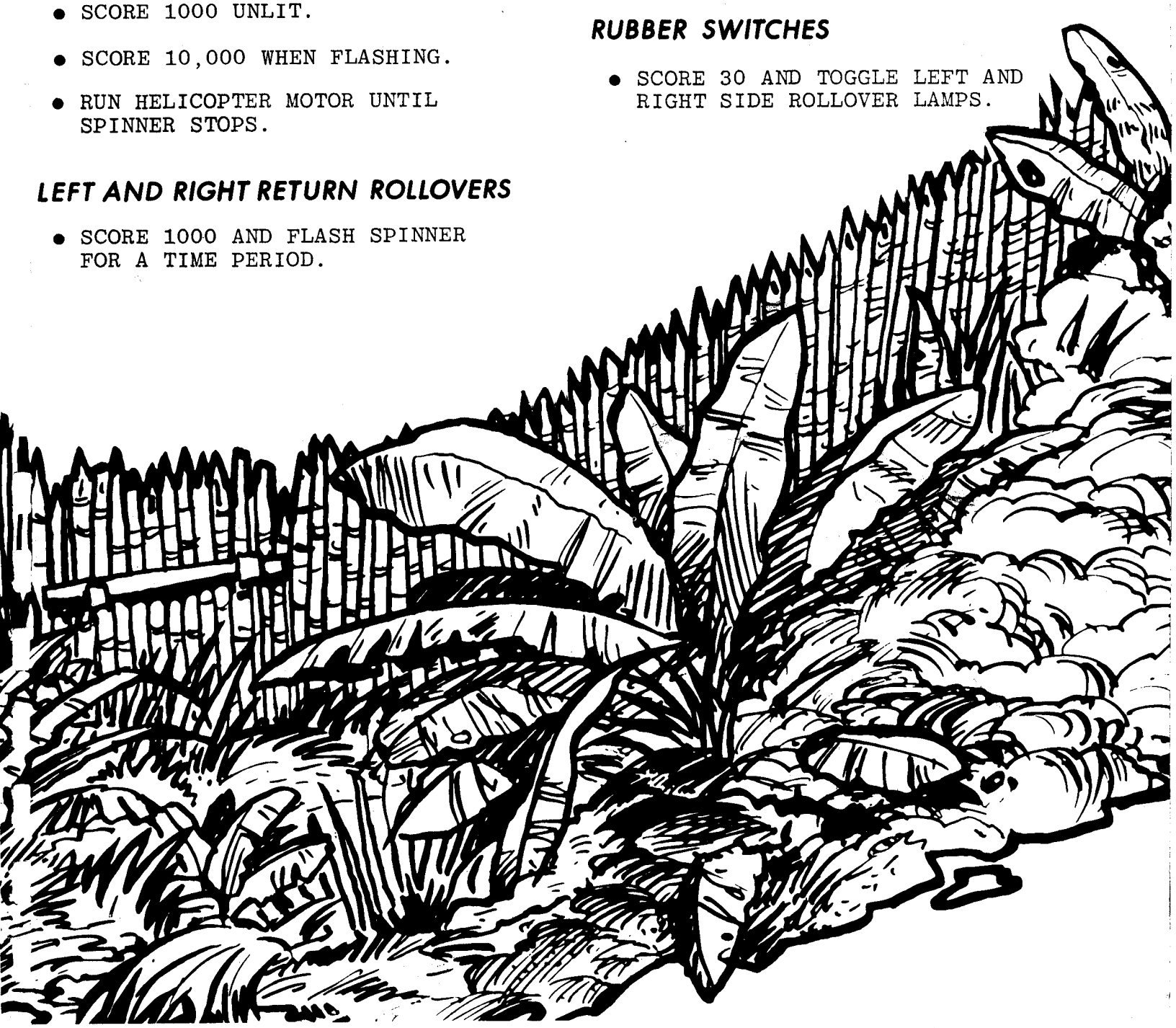

V. SOUND, VI. GAME ADJUSTMENTS

V. SOUND

The Sound Board installed in this game has been programmed for sound only.

VI. GAME ADJUSTMENTS

A. CONTROL BOARD SWITCH ADJUSTMENTS

NOTE: The following switch adjustments pertaining to **SYSTEM 80B** only. There are 32 switches on the control board which permit adjustment of the game parameters. These switches are contained in four packages of eight switches each, as shown below.

COIN CHUTE COMBINATIONS
SYSTEM 80B

SWITCHES					COIN CHUTE ADJUSTMENTS
S1	S2	S3	S4	S5	Left Coin Chute
S9	S10	S11	S12	S13	Right Coin Chute
S17	S18	S19	S20	S21	Center Coin Chute
					CREDITS/COINS
OFF	OFF	OFF	OFF	OFF	1/1
OFF	OFF	OFF	OFF	ON	2/1
OFF	OFF	OFF	ON	OFF	3/1
OFF	OFF	OFF	ON	ON	4/1
OFF	OFF	ON	OFF	OFF	5/1
OFF	OFF	ON	OFF	ON	6/1
OFF	OFF	ON	ON	OFF	7/1
OFF	OFF	ON	ON	ON	8/1
OFF	ON	OFF	OFF	OFF	9/1
OFF	ON	OFF	OFF	ON	10/1
OFF	ON	OFF	ON	OFF	1/2
OFF	ON	OFF	ON	ON	2/2
OFF	ON	ON	OFF	OFF	3/2
OFF	ON	ON	OFF	ON	4/2
OFF	ON	ON	ON	OFF	5/2
OFF	ON	ON	ON	ON	6/2
ON	OFF	OFF	OFF	OFF	7/2
ON	OFF	OFF	OFF	ON	8/2
ON	OFF	OFF	ON	OFF	9/2
ON	OFF	OFF	ON	ON	10/2
ON	OFF	ON	OFF	OFF	1/3
ON	OFF	ON	OFF	ON	2/3
ON	OFF	ON	ON	OFF	1/4
ON	OFF	ON	ON	ON	3/4
ON	ON	OFF	OFF	OFF	1/5

*All of the above do not give credits until the last coin is inserted.

SWITCH 6 — HIGH GAMES TO DATE CONTROL
- ON ..... Reset High Games #2-#5 on Power Off
- OFF ..... No Effect

SWITCH 7 — ATTRACT MODE SOUND
- ON ..... Enabled
- OFF ..... Disabled

SWITCH 8 — **SPARE**

SWITCH 14 — COIN CHUTE LEFT AND RIGHT CONTROL
- ON ..... Same
- OFF ..... Separate

SWITCHES 15 16 — **MAXIMUM CREDITS**

15	16	
OFF	OFF	8
OFF	ON	10
ON	OFF	15
ON	ON	20

SWITCH 22 — **PLAYFIELD SPECIAL**
- ON ..... Extra Ball
- OFF ..... Special

SWITCHES 23 24 — HIGHEST GAME TO DATE AWARDS

23	24	
OFF	OFF	None (Not Displayed)
OFF	ON	None
ON	OFF	2 Replay
ON	ON	3 Replay

SWITCH 25 — **BALLS/GAME**
- ON 3
- OFF 5

SWITCH 26 — **MATCH**
- ON ..... On
- OFF ..... Off

SWITCH 27 — **REPLAY LIMIT**
- ON 1
- OFF ..... No Limit

SWITCH 28 — **NOVELTY**
- ON ..... Yes
- OFF ..... Normal

SWITCH 29 — **GAME MODE**
- ON ..... Extra Ball
- OFF ..... Replay

SWITCH 30 — **3RD COIN CHUTE CREDIT CONTROL**
- ON ..... Add 9
- OFF ..... No Effect

SWITCH 31 — SNIPER RESET CONTROL
- ON .... Completing either 3 left or 3 right bottom spot targets enables snipers
- OFF ..... Completing all 6 bottom spot targets enables snipers

SWITCH 32 — SPECIAL CONTROL
- ON ..... Any 3 snipers hit enables special (Liberal)
- OFF .... All 4 snipers hit enables special (Conservative)

ADDITIONAL COIN CHUTE COMBINATIONS
CREDIT INCENTIVES

ALL OF THE BELOW CANNOT HAVE 9 CREDITS ADDED BASED ON SWITCH 30

SWITCHES											
S1	S2	S3	S4	S5 -	Left Coin Chute						
S9	S10	S11	S12	S13 -	Right Coin Chute						
S17	S18	S19	S20	S21 -	Center Coin Chute						
					COIN/CREDIT GIVEN	**COIN/CREDIT GIVEN**	**COIN/CREDIT GIVEN**	**COIN/CREDIT GIVEN**	**COIN/CREDIT GIVEN**		**TOTAL COIN/ TOTAL CREDIT**
ON	ON	OFF	OFF	ON	1st/1	2nd/2				=	2/3
ON	ON	OFF	ON	OFF	1st/0	2nd/1	3rd/1	4th/1		=	4/3
ON	ON	OFF	ON	ON	1st/0	2nd/1	3rd/0	4th/2		=	4/3
ON	ON	ON	OFF	OFF	1st/1	2nd/1	3rd/1	4th/2		=	4/5
ON	ON	ON	OFF	ON	1st/1	2nd/2	3rd/1	4th/3		=	4/7
ON	ON	ON	ON	OFF	1st/1	2nd/2	3rd/2	4th/2		=	4/7
ON	ON	ON	ON	ON	1st/0	2nd/0	3rd/1	4th/0	5th/1	=	5/2

VI. GAME ADJUSTMENTS

B. SOUND ADJUSTMENTS

The speaker(s) output is controlled by the potentiometer mounted on a bracket located inside the cabinet next to the front door hinge.

Turning the potentiometer counter clockwise will decrease the volume. Turning it clockwise will increase the volume.

SWITCH BANK SETTINGS:

DIP SWITCH

Position 1
On.....Background Enable
Off.....Background Disabled
Position 2.....Not Used
Position 3.....Off
Position 4.....On

C. POST ADJUSTMENTS

There are no liberal/conservative post adjustments in this game.

VII. BOOKKEEPING AND SELF TEST

The circuitry in this game helps the Operator perform many Bookkeeping and Self/Test functions. These functions are accessed by the Self/Test Switch inside the front door.

Section VII A., details the Bookkeeping system, while Section VII B., details the Self/Test operation. The Flow Chart in Section VII D., gives the general order and function of both Bookkeeping and Self/Test steps.

A. BOOKKEEPING SYSTEM 80B

- See Flow Chart for Bookkeeping Assignments (1-15).

I. STEPPING THROUGH BOOKKEEPING

1. Press the SELF-TEST button inside the front door.

"TEST MODE" should appear in the upper display.

2. Press the SELF-TEST button again. Step 1 and its information will be displayed.
3. Pressing the SELF-TEST button will increment the bookkeeping step number and appropriate information will be displayed.

Pressing the SELF-TEST button after Step 15 will start the SELF-TEST function (Step 16-21). At this point Bookkeeping cannot be reentered by pressing the SELF-TEST button. To reenter, turn the game OFF/ON or open the slam switch. The game will return to the attract mode. Then press the SELF-TEST button.

4. To exit from Bookkeeping at any time:

   a. Turn power OFF/ON <u>or</u>
   b. Open slam switch.

II. HOW TO SET BOOKKEEPING INFORMATION TO ZERO

1. <u>For a Particular Bookkeeping Step</u>

   a. Advance Bookkeeping so the step to be zeroed is displayed.

   b. Press the credit button. Notice information replaced by zeros. Note: Step 6 (Replay Percentage) cannot be zeroed using the credit button.

2. Zeroing All Bookkeeping Steps <u>Except #11, 12, 13 and 14.</u>

   (These are the replay level and high game to date scores)

   a. Go to Step #15.

   b. Press the credit button. A message will be displayed.

   c. Zeroing is complete.

III. HOW TO RESET HIGH SCORE LEVELS OR HIGH GAME TO DATE SCORES

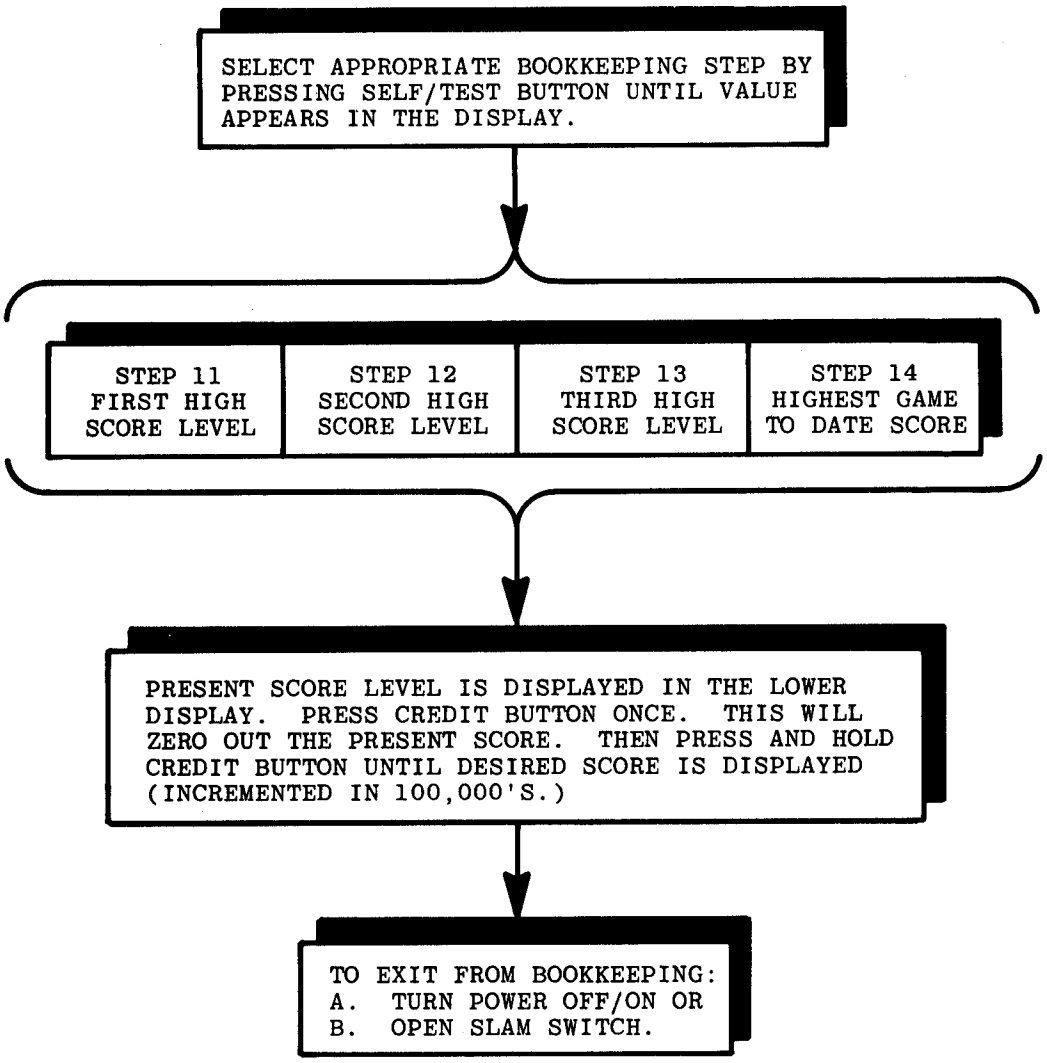

NOTES:

1. Step 11 must be a lower score than Step 12. Step 12 must have a lower score than Step 13. Otherwise, the scores will not be recognized.

2. If Step 12 or Step 13 is not desired, set those scores to zero.

3. If Step 14 is reset, all High Games to Date scores are reset.

VII. BOOKKEEPING AND SELF TEST

B. FLOW CHART

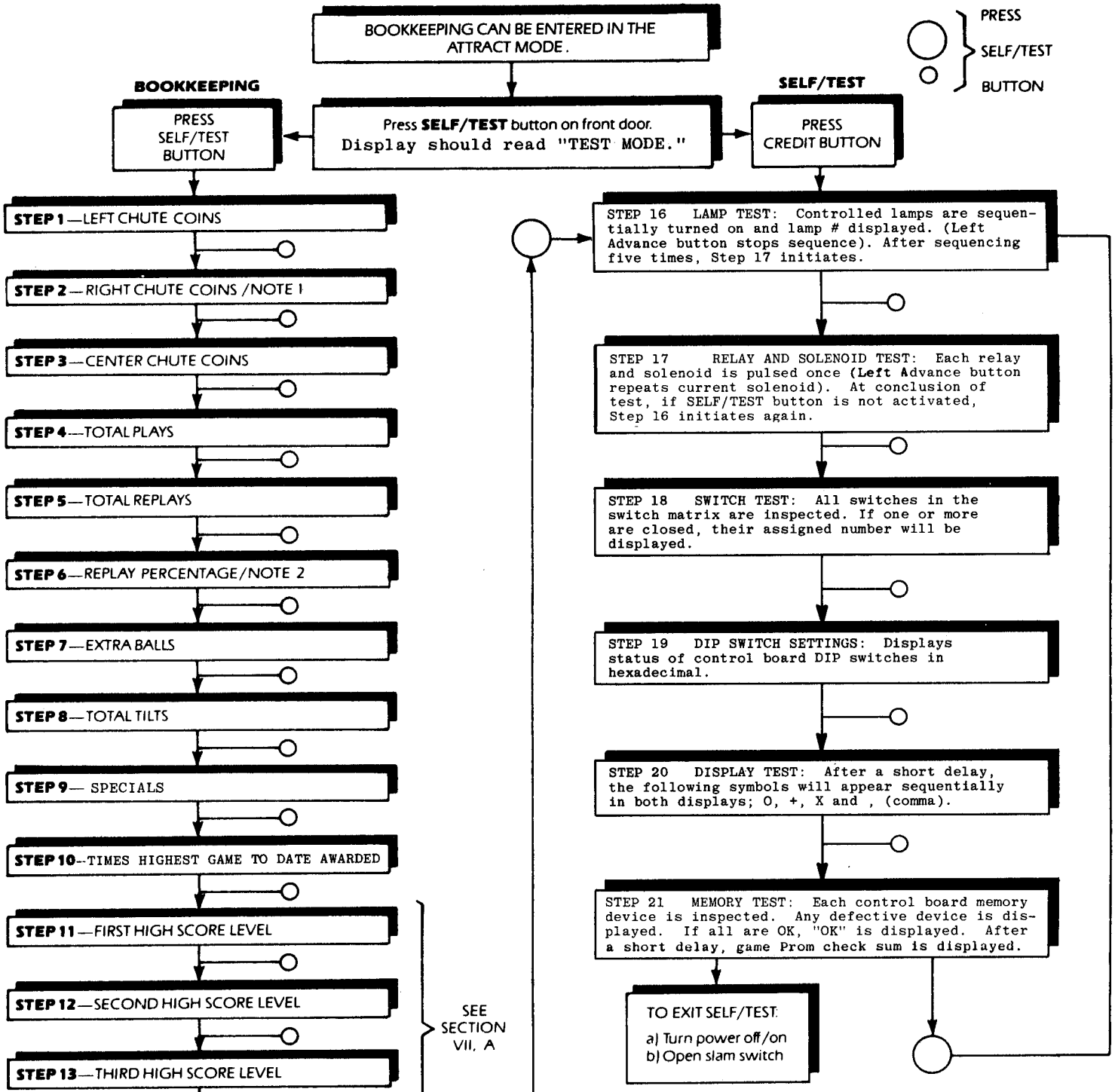

NOTES:

1. If Control Board switch #14 is on. Steps 1 and 2 are added together and displayed in Step 1.

2. To reset Step 6, Steps 4 and 5 must be reset. If Asterisks appear on lower display, Percentage is invalid (Greater than 100%).

3. If step 15 is reset, Steps 1 thru 10 are also reset. If Asterisks appear on lower display, Time is invalid (Greater than 16½ minutes per game).

C. SELF/TEST

- Steps 16 through 21 are SELF/TEST or game tests the operator can use for quick troubleshooting.
- All the tests are explained in the flow chart.
- To advance to the next test, press the SELF/TEST switch.
- Each test can be repeated by pressing the credit button.

STEP 16—LAMP TEST

a. Lamp Test-Lamps are sequentially strobed. Lamp assignment numbers appear in the lower display.

The Left Advance button stops lamp sequencing for repeated flashing of active lamp. (Single Step Mode).

Lamp number (L9, L16, etc.) can be referenced to the Driver Board Schematic where the specific transistor for each lamp can be identified.

STEP 17—RELAY AND SOLENOID TEST

a. Relay Test-All relays are pulsed in the following order with their corresponding lamp driver number appearing in the lower display.

The left advance button stops sequencing for repeated activation of relay or solenoid. (Single Step Mode).

A3 Driver Board Transistor Assignment (See Schematic)

Q (Game Over) Relay.....A3J3 PIN-$\bar{A}$(Q1)
T (Tilt) Relay.....A3J3 PIN-$\bar{B}$(Q2)

(Any other relays which may be used).

b. Solenoid Test-Each solenoid on the playfield is sequentially pulsed. The solenoid number displayed identifies which solenoid is being tested. The following chart lists solenoid assignments.

NUMBER DISPLAYED	ASSIGNMENT	A3 DRIVER BOARD TRANSISTOR ASSIGN. SEE SCHEMATIC
Sol.1	Top Left Bank Reset	Q60
Sol.2	Top Left Bank Trip	Q57/Q58
Sol.3	Not Used	Q54
Sol.4	Q2 Driver	Q55
Sol.5	Bot.Left Bank Reset	Q61/Q62
Sol.6	Bot.Left Bank Trip	Q63/Q64
Sol.7	Q3 Driver	Q56
Sol.8	Knocker Assembly	Q53
Sol.9	Outhole	Q59

STEP 18—SWITCH TEST

a. If all switches are open, "ALL SWITCHES OPEN" appears in the lower display. (Note: Slam switch is not part of this test.)

b. If any switch(es) are closed, their corresponding matrix location will appear sequentially in the lower display.

STEP 19—DIP SWITCH SETTINGS

a. The status of the Control Board (A1) switches appears in the lower display.

DISPLAYED HEXADECIMAL	DECIMAL	BINARY
0	0	0000
1	1	0001
2	2	0010
3	3	0011
4	4	0100
5	5	0101
6	6	0110
7	7	0111
8	8	1000
9	9	1001
A	10	1010
B	11	1011
C	12	1100
D	13	1101
E	14	1110
F	15	1111

VII. BOOKKEEPING AND SELF TEST

CONTROL BOARD (A1) SWITCHES

EXAMPLE

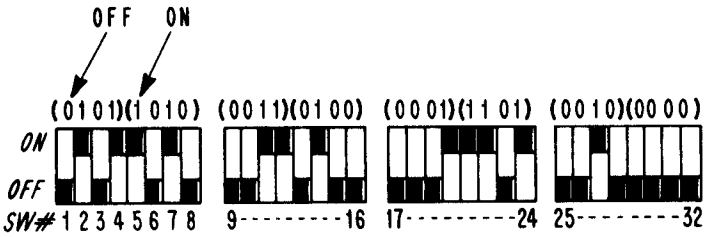

DISPLAYED

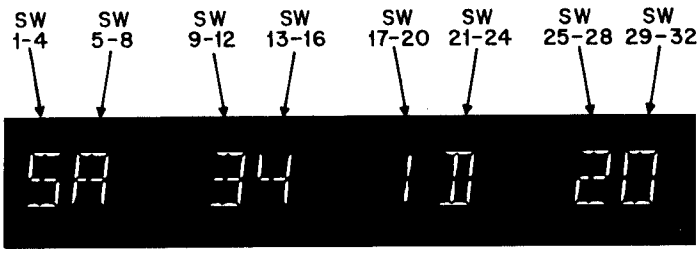

Checking Switches

1) Switch all odd number switches to the ON position, and all even switches to the OFF position. Press credit button. Display should now show:

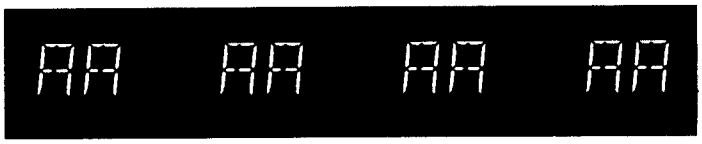

2) Switch all even numbered switches to the ON position and all odd switches to the OFF position. Press credit button. Display should now show:

STEP 20—DISPLAY TEST

After a short delay, the following characters will appear sequentially in all digit positions; O, +, X and , (comma).

STEP 21—MEMORY TEST

Each control based memory device is checked. If all are good, an "OK" will be displayed.

If a memory chip located on the A1 Control Board is defective, its number will be displayed. If no devices are found to be defective, "OK" is displayed in the lower display. Then after a short delay the Game Prom check sum will be displayed.

VIII. THEORY OF OPERATION

This section will cover only the differences between System 80A and System 80B. Figure 1 is a block diagram indicating the interconnections between the modules of System 80B.

A. CONTROL BOARD (A1)

The Piggyback Board eliminates the need for the ROMS (U2-U3) and the game prom (PROM 1) used in System 80A. The new game prom for each game is a 2764 EPROM labeled with the game number. This device is plugged into the Piggyback Board which is soldered into the Control Board.

The use of the Alphanumeric Display eliminates the need for Z19, Z21, Z22, Z23, Z24, Z25 (System 80A Display Control), and connector A1J3. The Control Board transmits information to the Display Board via a data bus (DATA 0 - DATA 7) and control lines (LD1, LD2, and RESET) from A1J2 to 1A4J1. The state of the LD1 and LD2 lines determine whether the upper or lower display tube receives the information on the data bus.

B. POWER SUPPLY (A2)

The new Power Supply develops a regulated +5V DC only and supplies it to the Control Board (VCC), Display Board (VSS), and Sound Board (VCC).

C. DISPLAY BOARD (A4)

This board takes the place of the four and seven digit displays used in System 80A games. During game play the upper display contains the scores of players one and two along with the ball in play (center). The lower display contains the scores of players three and four along with the amount of credits remaining (center). During Game Over the display information alternates between the scores from the previous game and the current High Games To Date.

The Display Board incorporates two vacuum fluorescent display tubes and three display controllers (U1-U2-U3). Each tube consists of a filament, grids (digits), and anodes (segments). U1 controls the digits of the upper display tube. U2 controls the digits of the lower display tube. U3 controls the segments of both tubes. When power is supplied to the game, the Control Board sends a negative going reset pulse to the base of Q1. This resets the display system. The digit information is multiplexed using an internal clock in U1 to control the refresh rate. This makes it appear as if all the digits are being enabled at once.

VIII. THEORY OF OPERATION

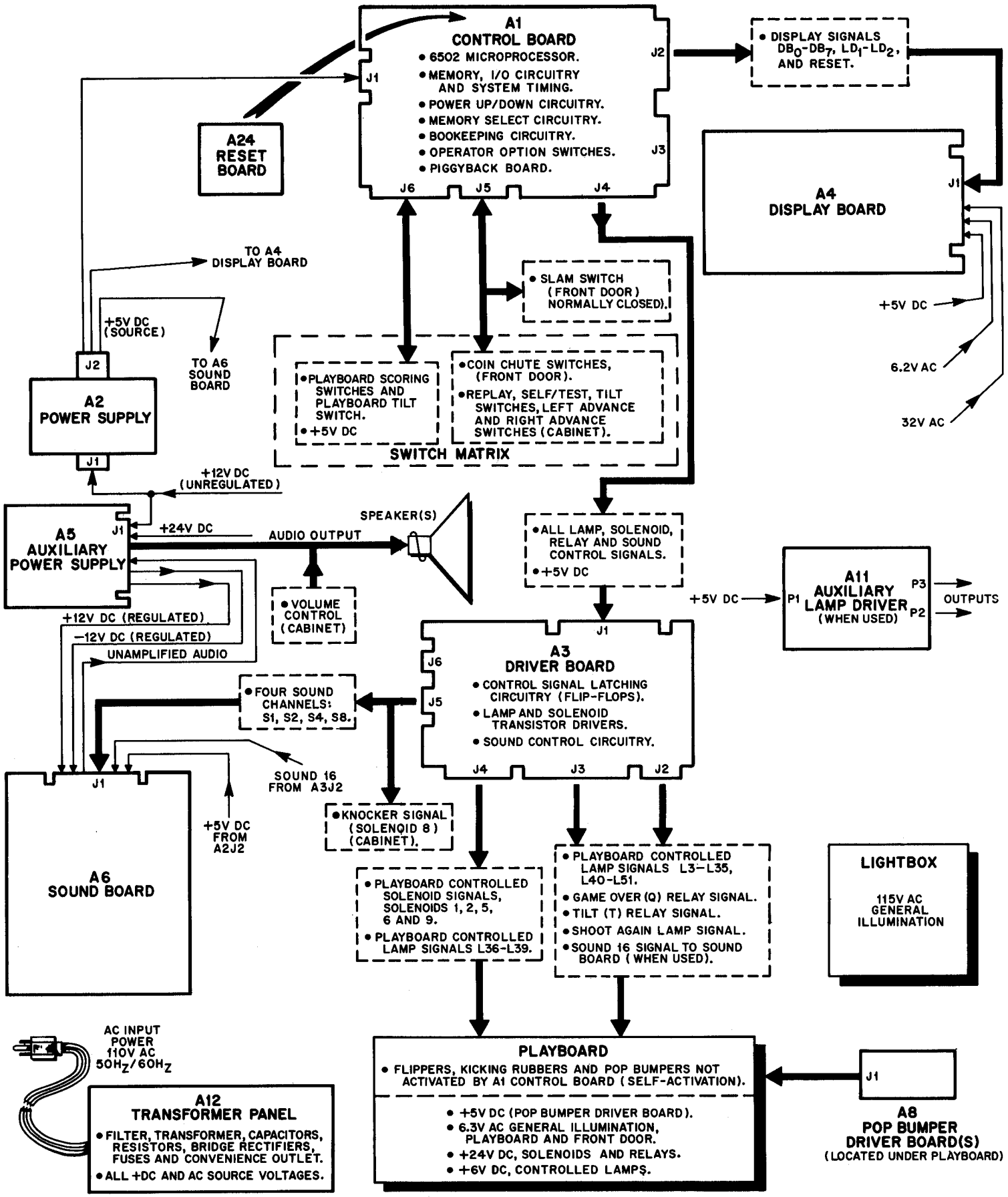

FIGURE I. SYSTEM 80B BLOCK DIAGRAM

VIII. THEORY OF OPERATION

The Display Board is supplied with 32V AC from the transformer panel. Voltages VGG, VDD, and VCO are then developed from this input. The transformer panel also supplies 6.2V AC to the display tube filaments.

The filaments are biased 7.5V DC above VGG (VCO) by the zener diode VR1. Figure 2 shows the basic drive circuitry and waveform for a single digit and segment of the display.

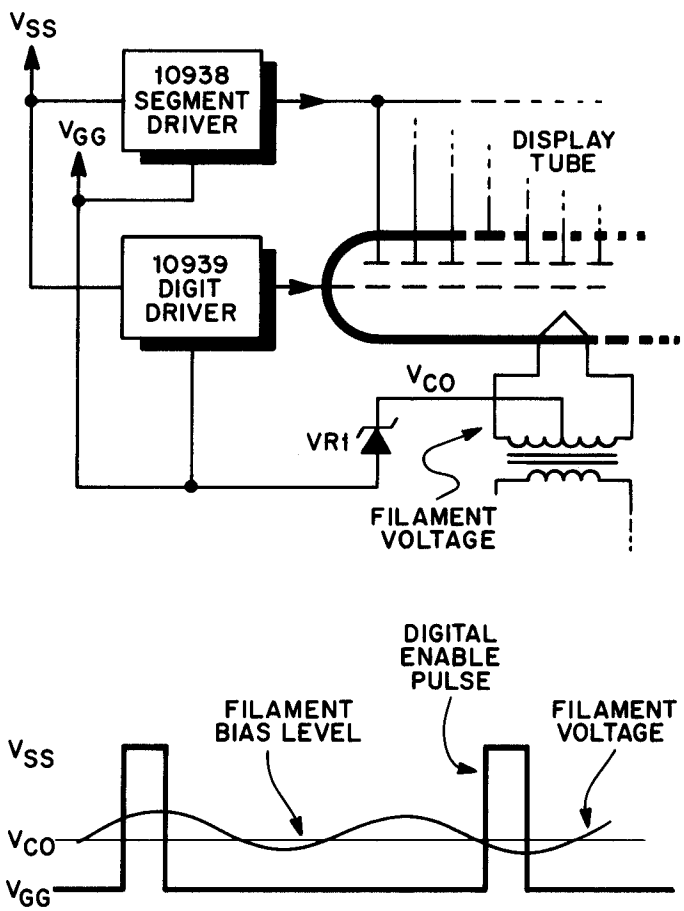

FIGURE 2. BASIC DRIVE CIRCUIT

D. SOUND BOARD (A6)

The MA-766 Sound Board consists of two 6502 microprocessor systems, a dual DAC, an L.P.C. speech generator, two programmable sound generators, input ports to receive commands from the game Control Board, and a low level audio output, which is sent to the MA-767 Auxiliary Power Supply Board for amplification.

The Sound Board requires three supply voltages: +5V DC, +12V DC and -12V DC. In addition a power up reset signal is required from the Control Board.

SYSTEM CLOCK

A 4 MHz oscillator is configured with R11, R12, C14, C15, C21, XTAL-1 and T1. R21 and C22 are optional. This 4 MHz clock is divided by 4 to a 1 MHz clock for both processors' clock input, pin 37 of N1 and T3. A 2 Mhz clock from S1 pin 14 is sent to the two AY-3-8913 Programmable Sound Generator, H4 and K4, pin 20. A 250 KHz signal from S1 pin 11 is the clock for the programmable timer section consisting of N5, H5, T5 and K5, pin 2.

INPUT CODE LATCH SYSTEM

Eight input lines from the Control Board come in on A6P1 and are pulled up by S1P1 and sent to the two input code latches A3 and B2, one for each microprocessor system. A2, pin 8, becomes a logic high when any of it's inputs are low. This output is connected to pin 11 of the input code latches (A3 and B2). A positive edge at pin 11 causes A3 and B2 to latch the data at their inputs. A2 pin 8 is also connected to the clock inputs of two flip flops, A4 pin 3 and A4 pin 11. When A2 pin 8 goes high, both flip flops are clocked, setting both $\overline{Q}$ outputs low. The $\overline{Q}$ outputs, A4 pin 6 and pin 8, are connected to both of the 6502's active low interrupt request lines, T3 and N1, pin 4. The $\overline{Q}$ outputs of A4 will stay low until the associated 6502 reads its input port therefore clearing the interrupt.

NOTE: DIP Switch 3 should remain off and DIP Switch 4 should remain on. This prevents the S4 input from generating an interrupt.

VIII. THEORY OF OPERATION

SYSTEM RAM

The sound board is designed to accomodate different types of RAM. JP1 and JP3 should be connected if HM6116's or 2158A's are used. JP2 and JP4 should be connected if 2158B's are used.

RESET

The Sound Board receives an external reset signal from A1J2 pin 24. This active low reset signal is pulled up by R34 and sent to G5, pin 1 (2-input AND gate). However, if a manual reset is desired, pushing switch SW2 will reset the processor.

INPUT PORT

Input Port B3 reads the test switch SW1 and two option switches, DIP switches 1 and 2. Pressing test switch SW1 will produce a tone.

MAIN SUMMER

The main summer consists of R13 through R17 and B1, pins 12, 13 and 14. B1 pin 14 is the main output from the Sound Board, at A6P1 pin 18, and will swing plus or minus 5V peak to peak.

IX. GENERAL INFORMATION

A. PRINTED CIRCUIT BOARDS ARE DESIGNATED AS FOLLOWS:

A1 - Control Board
A2 - Power Supply
A3 - Driver Board
A4 - Display Board
A5 - Auxiliary Power Supply
A6 - Sound Board
A7 - Diode Boards
A8 - Pop Bumper Driver Boards
A11- Auxiliary Lamp Driver
A24- Reset Board

Printed circuit board connectors will be labeled AX-JX. For example, A3-J4 is the connector J4 on the driver board (A3).

B. WIRE COLORS ARE SHOWN AS NUMBERS:

0 Black
1 Brown
2 Red
3 Orange
4 Yellow
5 Green
6 Blue
7 Violet
8 Gray
9 White

For example, 688 is a BLUE-GRAY-GRAY striped wire.

C. FUSES

TRANSFORMER PANEL FUSES

F1	Sound/Speech Power Supply (A6)	12V AC	1/2 Amp
F2	Power Supply (A2)	10V AC	6-1/4 Amp SLO-BLO
F3	Display	32V AC	1/4 Amp SLO-BLO
F4	Solenoids (+24V DC)	28V AC	8 Amp SLO-BLO
F5	Controlled Lamps	8V AC	15 Amp
F6	Playboard Illumination	6.3V AC	7-1/2 Amp
F7	Lightbox Illumination	115V AC	1/2 Amp SLO-BLO
F8	Primary Power	110V AC	5 Amp SLO-BLO
		220V AC	2-1/2 Amp SLO-BLO
F20	Input Line	110V AC	8 Amp SLO-BLO
		220V AC	4 Amp SLO-BLO

PLAYBOARD FUSES

F9	Outhole	1 Amp SLO-BLO
F10	Top Left Bank Reset, Top Left Bank Trip, Top Right Bank Reset, Top Right Bank Trip	1 Amp SLO-BLO
F11	Bottom Left Bank Reset, Bottom Left Bank Trip, Bottom Right Bank Reset, Bottom Right Bank Trip	1 Amp SLO-BLO
F12	Top Left Pop Bumper	2 Amp SLO-BLO
F13	Top Right Pop Bumper	2 Amp SLO-BLO
F14	Bottom Left Pop Bumper	2 Amp SLO-BLO
F15	Bottom Right Pop Bumper	2 Amp SLO-BLO
F16	Ramp	2½ Amp SLO-BLO

D. COIL CHART

SOLENOID COILS					
PART NUMBER	GENERAL USAGE	RESISTANCE (OHMS)	NUMBER OF TURNS	WIRE GAUGE	WRAPPER COLOR
A-1496	KICKING TARGET KICKING RUBBERS POP BUMPERS	2.95	635	#23	Yellow
A-4893	UP KICKER POP BUMPERS BALL KICKER	2.1	535	#22	Red
A-5194	UP KICKER GONG KICKING TARGETS POP BUMPERS	4.5	780	#24	Blue
A-5195	CONTACT KICKER KNOCKER HOLE KICKER	11.6	1305	#26	White
A-16570	HOLE KICKER, OUTHOLE	15.5	1450	#27	Green
A-17875	FLIPPERS	2.8/40	560/1100	#24/31	Yellow
A-17891	5 BANK RESET	3.35	850	#22	White
A-18102	3 BANK RESET, 7 BANK RESET USES 2	9.0	1430	#24	Red
A-18318	4 BANK RESET	6.7	1130	#24	Orange
A-19300	BALL KICKER	7.8	1075	#25	Orange
A-20095	SUPER FLIPPER	1.55/35.5	450/900	#22/31	Red
A-21741	UP KICKER	2.5	575	#23	Orange
A-24161	INTERMEDIATE FLIPPER	2.2/40	520/1050	#23/31	Blue
RELAY COILS					
A-16890	Q, T, AND COIN LOCKOUT RELAYS	231.0	4000	#35	Orange
A-20558	GATE RELAY	156.0	3400	#34	White
A-18642	MEMORY/ DROP TARGETS	58.0	1590	#33	White

*Coils may vary from game to game. Check game manual for exact coil usage.

X. WIRING AND SCHEMATIC DIAGRAMS, PARTS LISTS

TABLE OF CONTENTS

PAGE(S)

POP BUMPER DRIVER BOARD (A8)
COMPONENT LOCATION AND PARTS LIST..... 20
SCHEMATIC DIAGRAM..... 20

CONTROL BOARD (A1), PIGGYBACK
COMPONENT LOCATION AND PARTS LIST..... 21
SCHEMATIC DIAGRAM..... 21

CONTROL BOARD (A1)
COMPONENT LOCATION AND PARTS LIST..... 22
SCHEMATIC DIAGRAM..... 23-25

DRIVER BOARD (A3)
COMPONENT LOCATION AND PARTS LIST..... 26
SCHEMATIC DIAGRAM..... 27,28

AUXILIARY POWER SUPPLY (A5)
COMPONENT LOCATION AND PARTS LIST..... 30
SCHEMATIC DIAGRAM..... 30

SOUND BOARD (A6)
COMPONENT LOCATION AND PARTS LIST..... 31
SCHEMATIC DIAGRAM..... 32,33

LIGHTBOX
SCHEMATIC/WIRING DIAGRAM..... 34,35

DISPLAY BOARD (A4)
COMPONENT LOCATION AND PARTS LIST..... 36
SCHEMATIC DIAGRAM..... 37,38

RESET BOARD (A24)
COMPONENT LOCATION AND PARTS LIST..... 39
SCHEMATIC DIAGRAM..... 39

PLAYBOARD
PLAYBOARD SWITCH MATRIX..... 40
PLAYBOARD ILLUMINATION AND SOLENOIDS..... 41,42

AUXILIARY LAMP DRIVER (A11)
COMPONENT LOCATION AND PARTS LIST..... 43
SCHEMATIC DIAGRAM..... 43

POWER SUPPLY (A2)
COMPONENT LOCATION AND PARTS LIST..... 44
SCHEMATIC DIAGRAM..... 44

TRANSFORMER PANEL/CABINET
SCHEMATIC/WIRING DIAGRAM..... 45,46

X. WIRING AND SCHEMATIC DIAGRAMS, PARTS LISTS

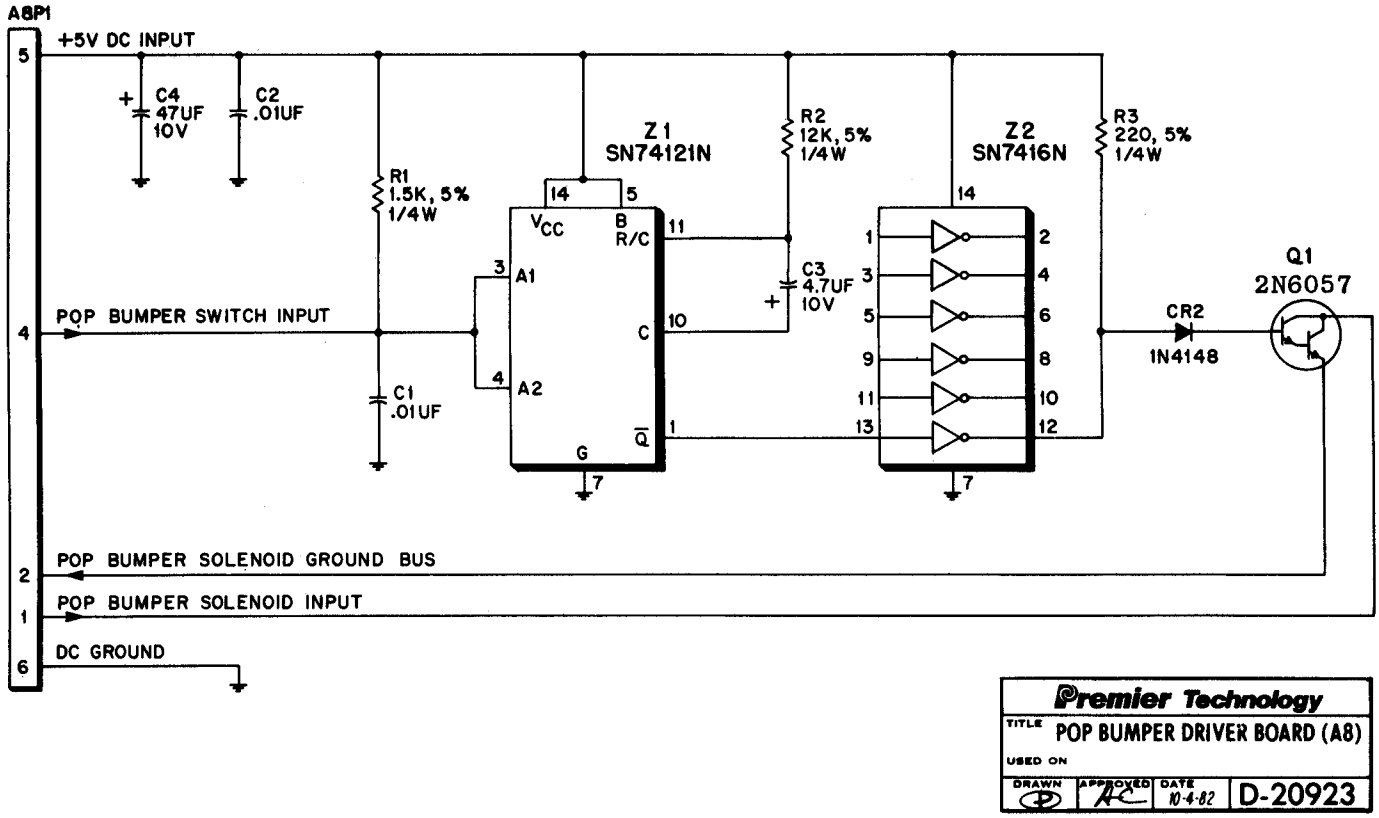

POP BUMPER DRIVER BOARD (A8) COMPONENT LOCATION

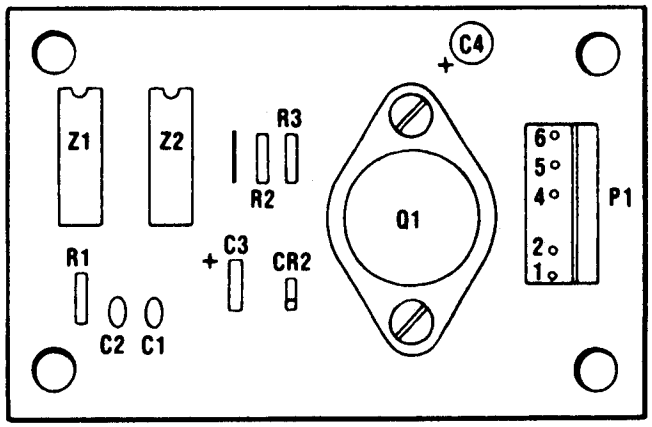

POP BUMPER DRIVER BOARD (A8) PARTS LIST

REFERENCE	DESCRIPTION	PART NUMBER
	POP BUMPER DRIVER BOARD	A-19741
C1, C2	Capacitor, .01 mfd., 100V	XO-202
C3	Capacitor, 4.7 mfd., 10%, 10V, Tantalum, Axial	XO-226
C4	Capacitor, 47 mfd., 10V	XO-227
CR2	Diode 1N4148	XO-261
P1	Connector 09-65-1061	XO-868
R1	Resistor, 1.5K ohm, 5%, ¼W	XO-20
R2	Resistor, 12K ohm, 5%, ¼W	XO-9
R3	Resistor, 220 ohm, 5% ¼W	XO-21
Q1	Transistor, Darlington 2N6057	XO-311
Z1	IC SN74121N	XO-417
Z2	IC SN7416N	XO-405

X. WIRING AND SCHEMATIC DIAGRAMS, PARTS LISTS

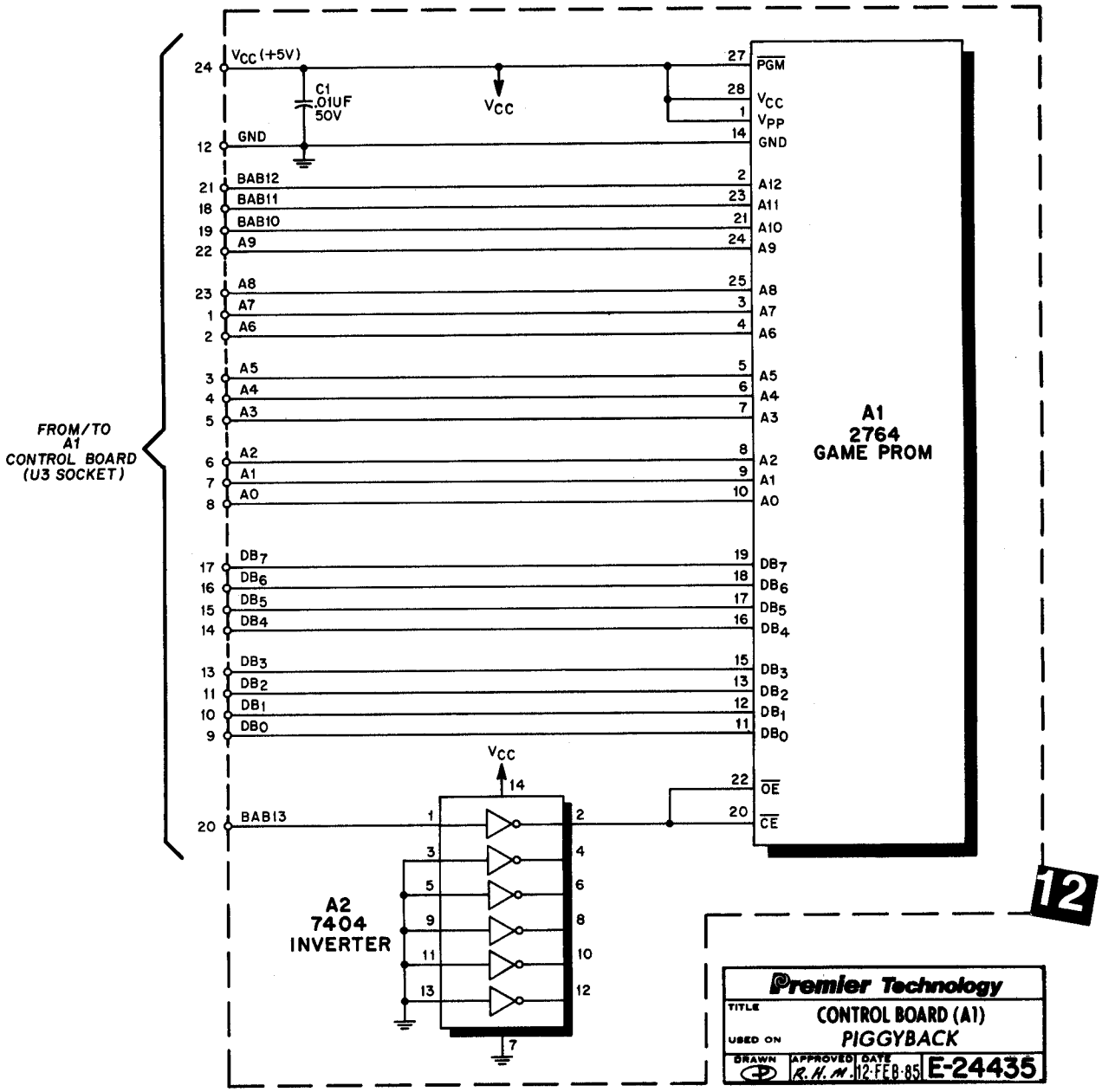

CONTROL BOARD (A1), PIGGYBACK COMPONENT LOCATION

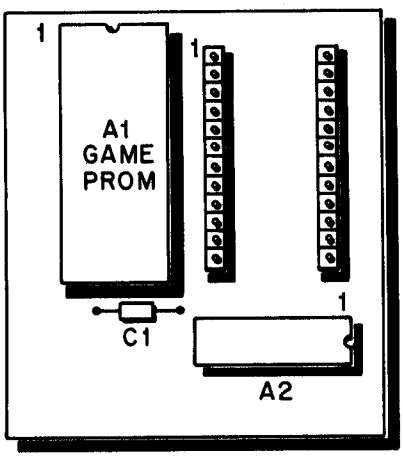

CONTROL BOARD (A1), PIGGYBACK PARTS LIST

REFERENCE	DESCRIPTION	PART NUMBER
	Control Board (A1), Piggyback	MA689
A1	Game Prom, 2764	XO-489
A2	IC, 7404 Inverter	XO-402
C1	Capacitor, .01UF, +80% -20%, 50V	XO-229
	Socket, 28 Pin	XO-536

X. WIRING AND SCHEMATIC DIAGRAMS, PARTS LISTS

CONTROL BOARD (A1) COMPONENT LOCATION

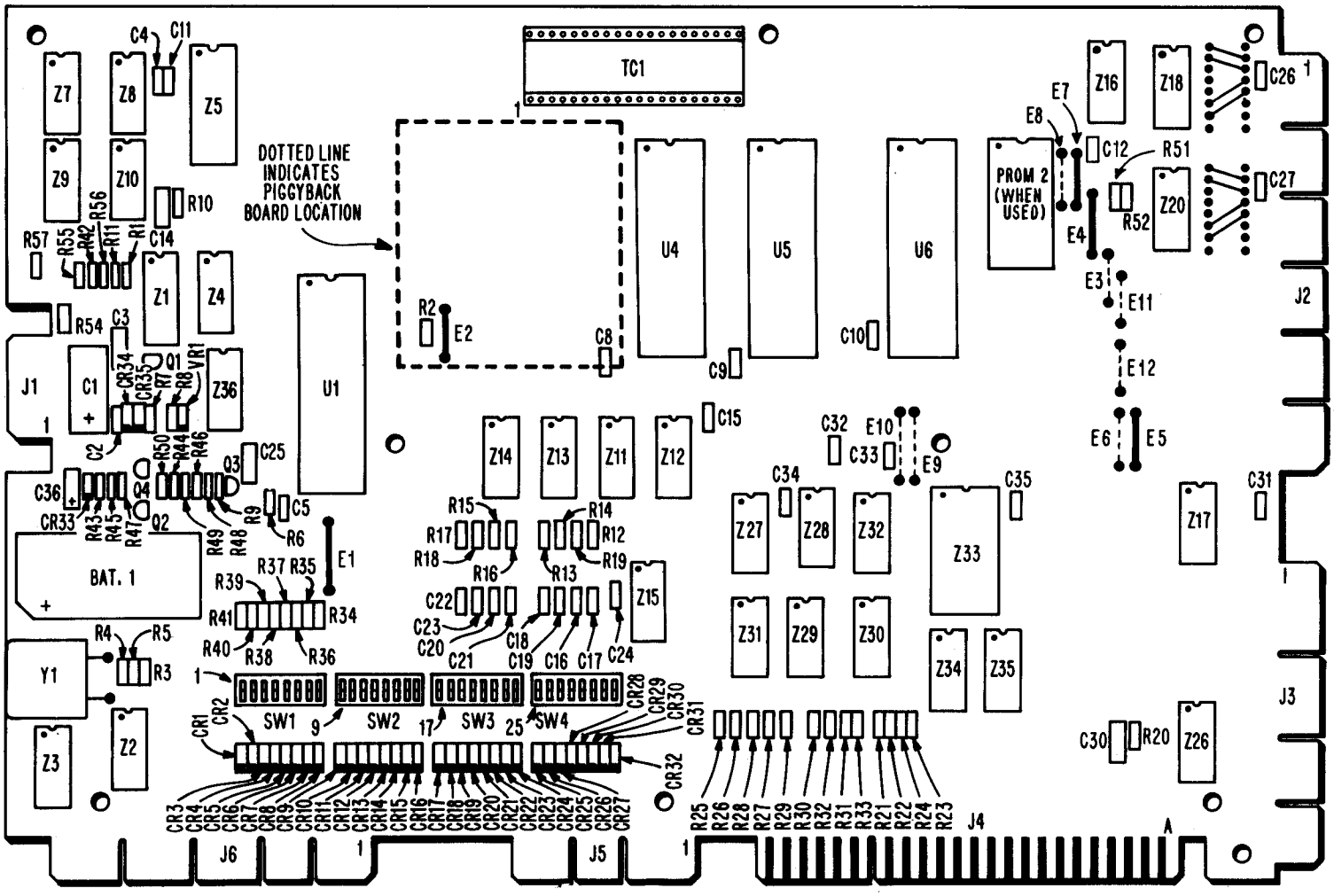

CONTROL BOARD (A1) PARTS LIST

REFERENCE	DESCRIPTION	PART NUMBER
	CONTROL BOARD	MA-774
Bat. 1	Battery-3.6V 326R10-002	XO-458
C1	Capacitor, 100 mfd., 10V	XO-211
C2, C4, C5, C8-C12, C15-C24, C26, C27, C31-C35	Capacitor, .01 mfd., 50V	XO-229
C3, C14, C25, C30	Capacitor, .1 mfd., 50V	XO-230
C36	10 mfd., 10V, TNT-AX CAP	XO-209
CR1-CR35	Diode, GP IN4148	XO-261
Q1, Q4	Transistor-PNP MPS-A70	XO-309
Q2, Q3	Transistor, NPN (Motorola) 2N4400	XO-313
R1, R6 R11-R24 R42, R45, R46, R48, R51, R52, R54-R57	Resistor, 3.0K ohm, 5%, ¼W	XO-23
R2, R34-R41	Resistor, 4.7K ohm, 5%, ¼W	XO-7
R3, R43, R49	Resistor, 5.6K ohm, 5%, ¼W	XO-19
R4, R5, R44	Resistor, 2.0K ohm, 5%, ¼W	XO-14
R7	Resistor, 62 ohm, 5%, ¼W	XO-3
R8, R50	Resistor, 180 ohm, 5%, ¼W	XO-24
R9	Resistor, 1K ohm, 5%, ¼W	XO-5
R10	Resistor, 2.7M ohm, 5%, ¼W	XO-13
R25-R33	Resistor, 620 ohm, 5%, ¼W	XO-4
R47	Resistor, 24K ohm, 5%, ¼W	XO-10
SW1-SW4	Dip Switch 1008-692	XO-505
TC1	Socket, 40 Pin 640379-3	XO-530
U1	CPU R6502-13	XO-360
U4, U5, U6	PRIOT R6532-18	XO-361
VR1	Diode-3.0V, 5% IN5225B or IN5987B	XO-269
Y1	Crystal, 3.579545 MHZ	XO-456
Z1	IC-Cmos-Dual 1 Shot SCL4528BE	XO-414
Z2	IC-Dual Flip Flop SN7474N	XO-423
Z3, Z11, Z12, Z16, Z17, Z26, Z27, Z34, Z35	IC-Hex Inverter SN7404N	XO-402
Z4	IC-Cmos-Quad 2 Input "And" SCL4081BE	XO-401
Z5	IC-Static Ram S5101-L	XO-356
Z7	IC-Hex Inverter SN74LS04N	XO-418
Z8	IC-2 Input "Nor" SN7402N	XO-421
Z9, Z13, Z14	IC-2 Input "Nand" SN7400N	XO-420
Z10	IC-Open Collector Inverter SN74LS05N	XO-411
Z15	IC-2 Input "Or" SN7432N	XO-407
Z18, Z20	IC-"D" Flip Flop SN74175N	XO-410
Z33	IC-4-16 Decoder SN74154N	XO-409
Z28	IC-2 to 4 Decoder SN74LS139N	XO-419
Z29, Z30	IC-Hex Inverter—OC/HV SN7416N	XO-405
Z31	IC-2 Input "And" SN7408N	XO-404
Z32	IC-Hex Buffer—OC SN7417N	XO-406
Z36	IC-Cmos SCL4069B	XO-424
	Socket 24 Pin 640361-3	XO-529
	CONTROL BOARD (A1),PIGGYBACK	MA689

NOTE: UNLESS OTHERWISE INDICATED;
1. RESISTORS ARE ±5%, 1/4W.
2. CAPACITORS ARE .01UF, 50V.
3. DIODES ARE TYPE 1N4148.
4. REF. DESIGNATION Z6 NOT USED.

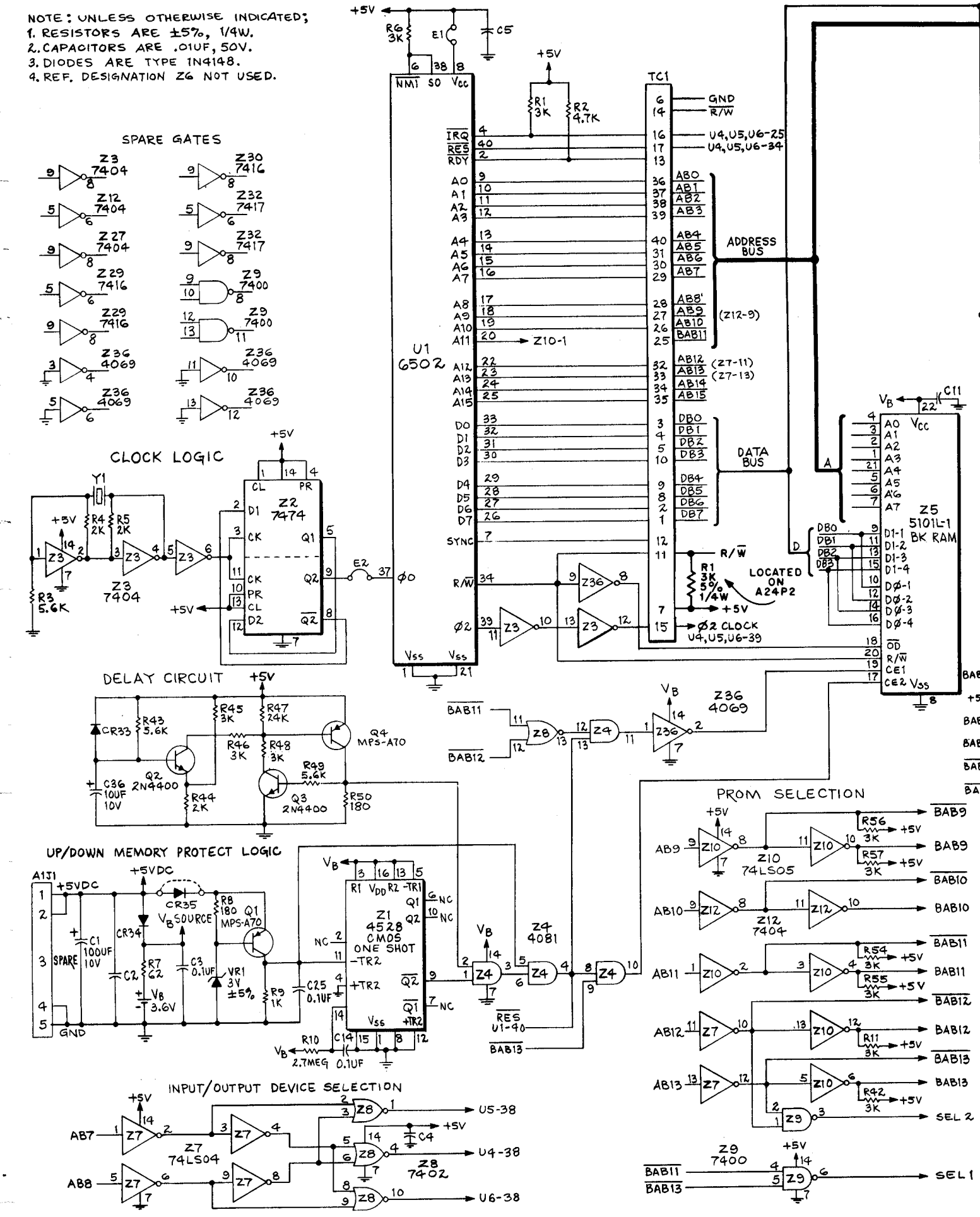

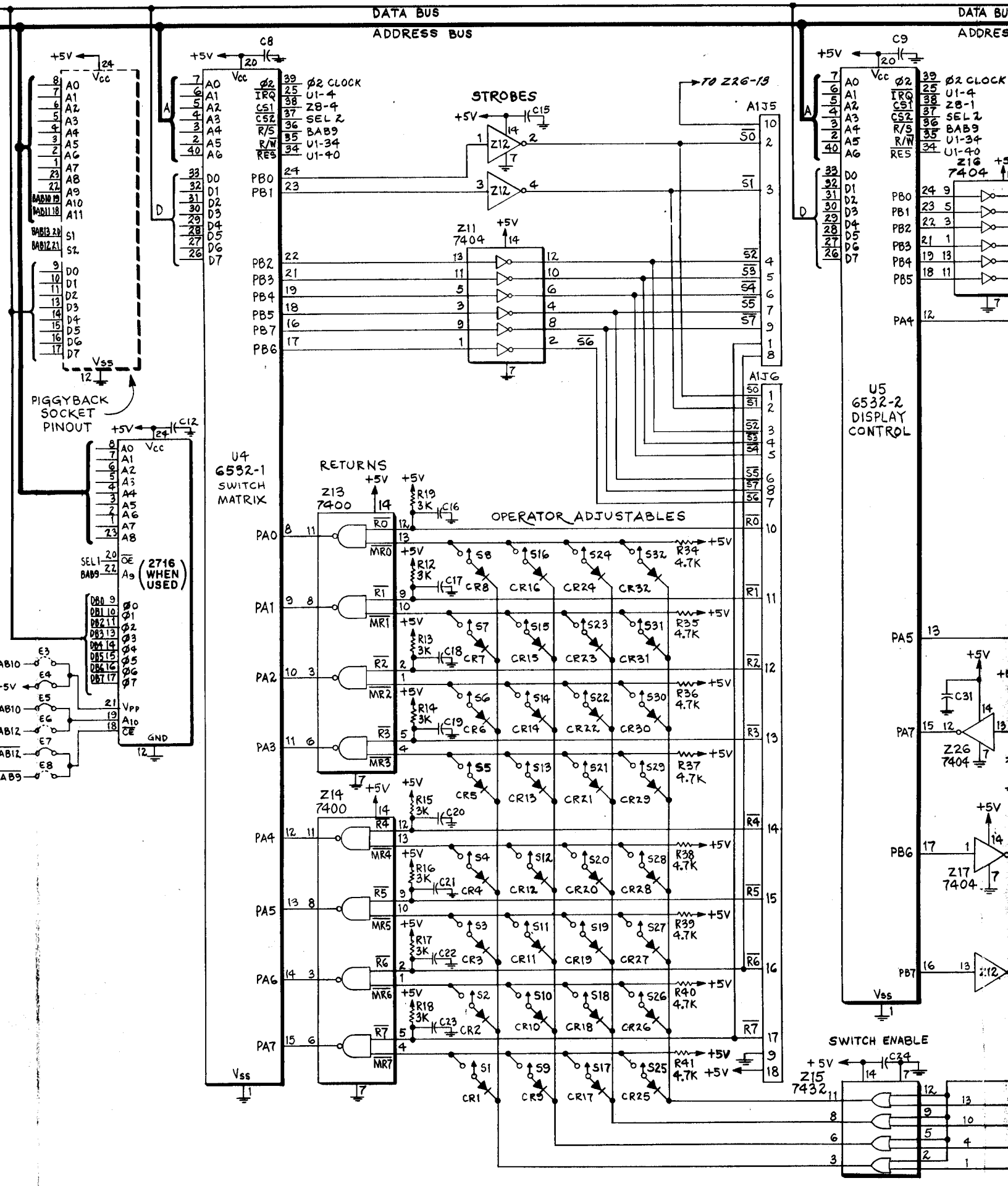
DATA BUS
ADDRESS BUS
STROBES
RETURNS
OPERATOR ADJUSTABLES
SWITCH ENABLE
PIGGYBACK SOCKET PINOUT
U4 6532-1 SWITCH MATRIX
U5 6532-2 DISPLAY CONTROL
2716 WHEN USED
TO Z26-13
Z11 7404
Z12
Z13 7400
Z14 7400
Z15 7432
Z16 7404
Z17 7404
Z26 7404
A1J5
A1J6
Ø2 CLOCK
U1-4
Z8-4
SEL 2
BAB9
U1-34
U1-40
Z8-1
+5V
Vcc
Vss
GND

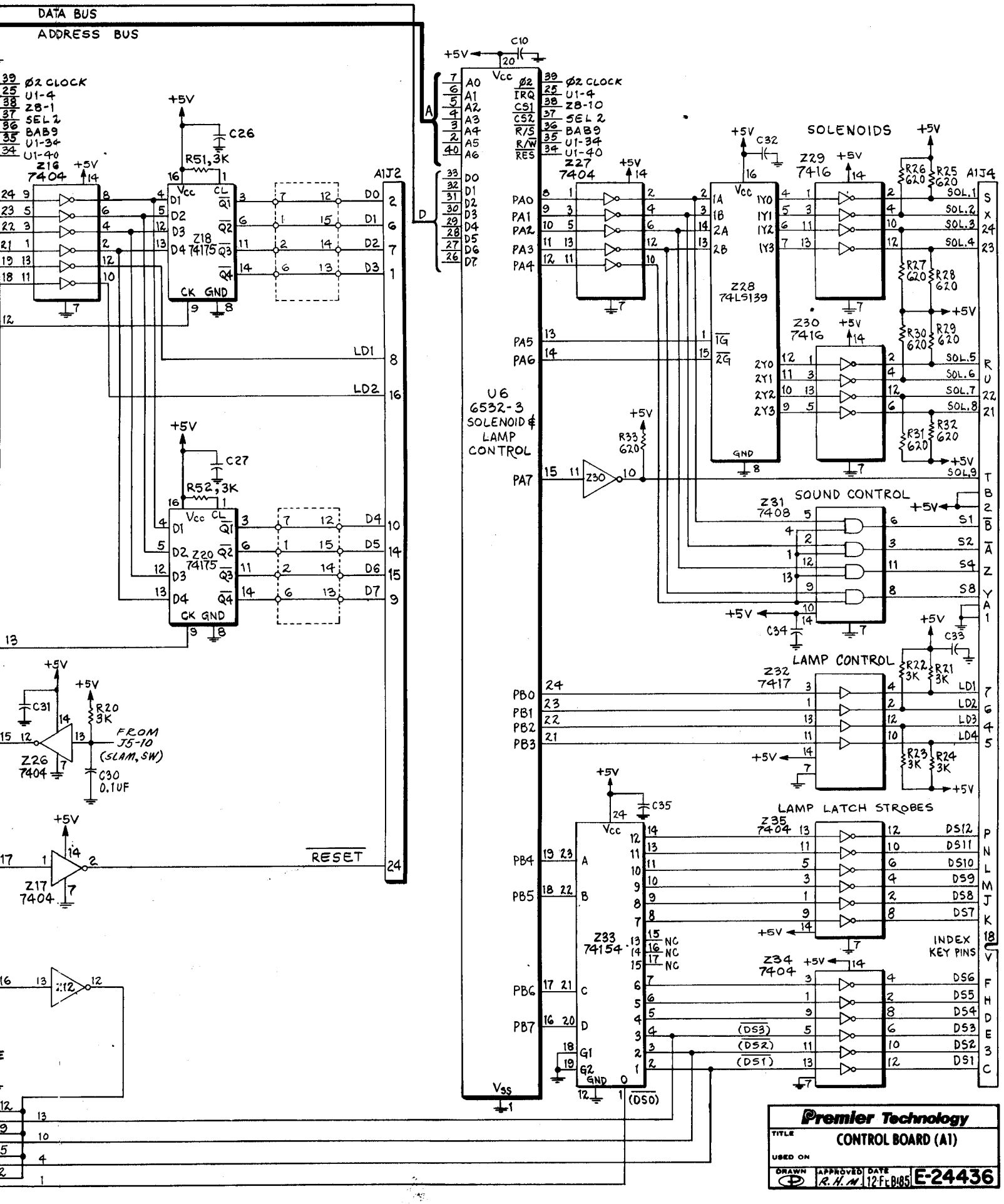
DATA BUS
ADDRESS BUS
Ø2 CLOCK
U1-4
Z8-1
SEL 2
BAB9
U1-34
U1-40
Z16 7404
Z18 74175
Z20 74175
R51, 3K
R52, 3K
C26
C27
A1J2
LD1
LD2
RESET
Z17 7404
Z26 7404
C31
R20 3K
FROM J5-10 (SLAM, SW)
C30 0.1UF
U6 6532-3 SOLENOID & LAMP CONTROL
C10
Z27 7404
Z28 74LS139
Z29 7416
Z30 7416
Z30
R33 620
SOLENOIDS
R26 620
R25 620
R27 620
R28 620
R30 620
R29 620
R31 620
R32 620
A1J4
SOL.1
SOL.2
SOL.3
SOL.4
SOL.5
SOL.6
SOL.7
SOL.8
SOL.9
SOUND CONTROL
Z31 7408
C32
C34
LAMP CONTROL
Z32 7417
C33
R22 3K
R21 3K
R23 3K
R24 3K
LD1
LD2
LD3
LD4
LAMP LATCH STROBES
Z35 7404
Z34 7404
Z33 74154
C35
INDEX KEY PINS
DS12
DS11
DS10
DS9
DS8
DS7
DS6
DS5
DS4
DS3
DS2
DS1
(DS0)
Premier Technology
TITLE
CONTROL BOARD (A1)
USED ON
DRAWN
APPROVED R.H.M.
DATE 12 FEB 85
E-24436

DRIVER BOARD (A3) COMPONENT LOCATION

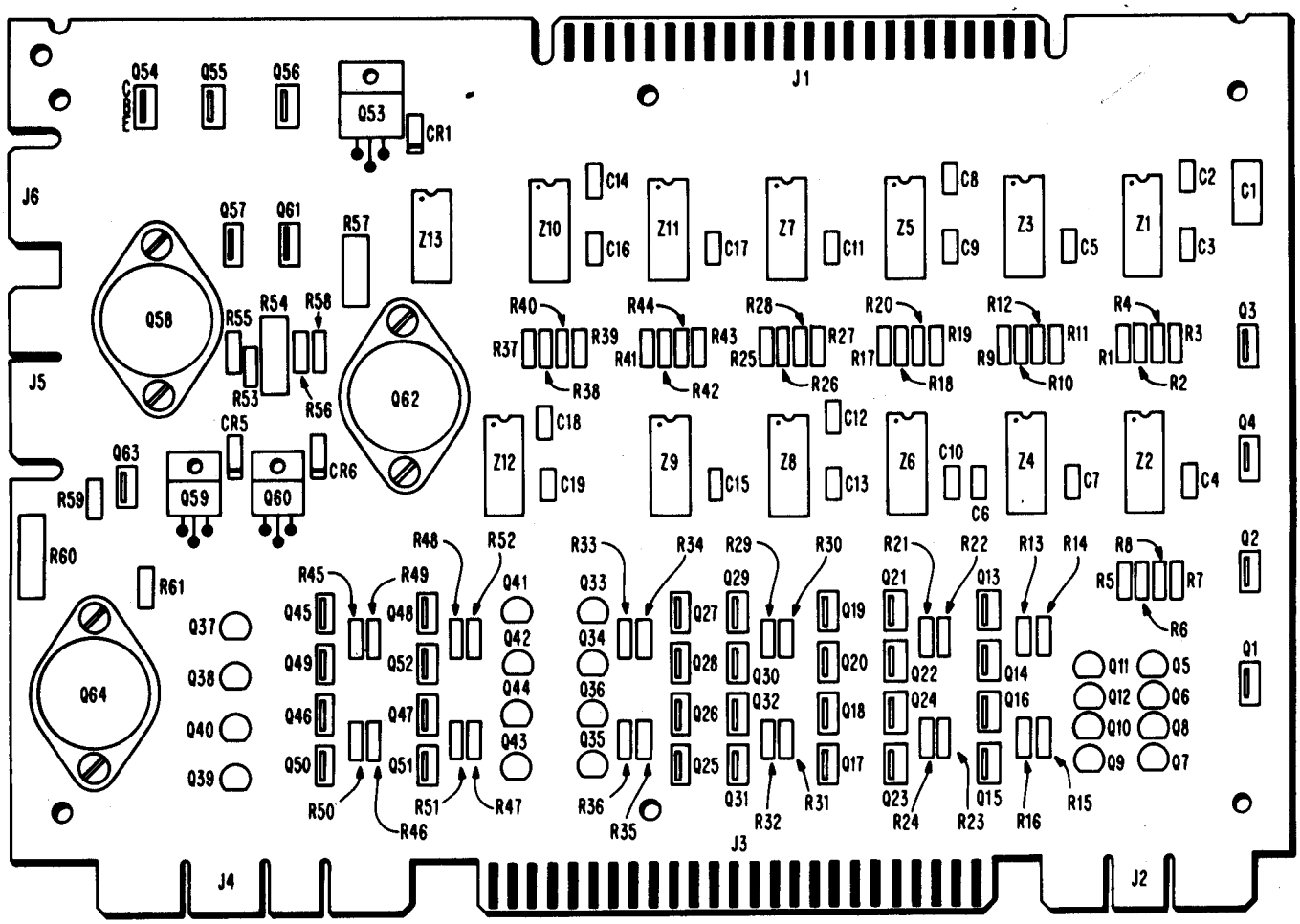

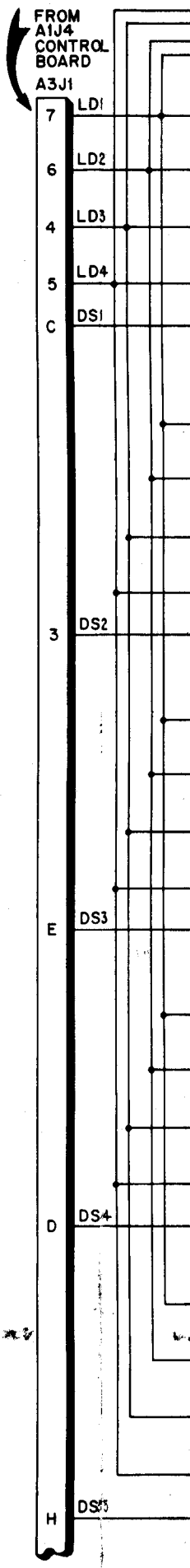

DRIVER BOARD (A3) PARTS LIST

REFERENCE	DESCRIPTION	PART NUMBER
	DRIVER BOARD	MA-295
C1	Capacitor, 10 mfd, 10V Tantalum	XO-209
C2-C19	Capacitor, 01 mfd, 50V Ceramic	XO-229
CR1-CR6	Diode—Silicon 1N4148	XO-261
R1-R53, R61, R55, R56, R58, R59	Resistor 1.0K ohm, 5%, ¼W	XO-5
R54, R57, R60	Resistor, 91 ohm, 5%, 1W	XO-158
Q1-Q4, Q13-Q32, Q45-Q52, Q54-Q57, Q61, Q63	Transistor, NPN, Darlington MPS-U45	XO-306
Q5-Q12, Q33-Q44	Transistor, NPN, Darlington MPS-A13	XO-304
Q53, Q59, Q60	Transistor, NPN, Darlington 2N6043	XO-303
Q58, Q62, Q64	Transistor, NPN, 2N3055	XO-301
Z1-Z12	IC-Quad "D" Latch Flip Flop SN74175N	XO-410
Z13	IC-Hex Inverter SN7404N	XO-402
	Insulator-Thermalloy 43-03-4	XO-512

NOTE:

1. *JUMPER WIRES REPLACED DIODES CR2, CR3 AND CR4 FOR SYSTEM 80A AND 80B GAMES.*
2. *TRANSISTOR TYPES MPS-U45 AND NDS-U45 ARE INTERCHANGEABLE.*

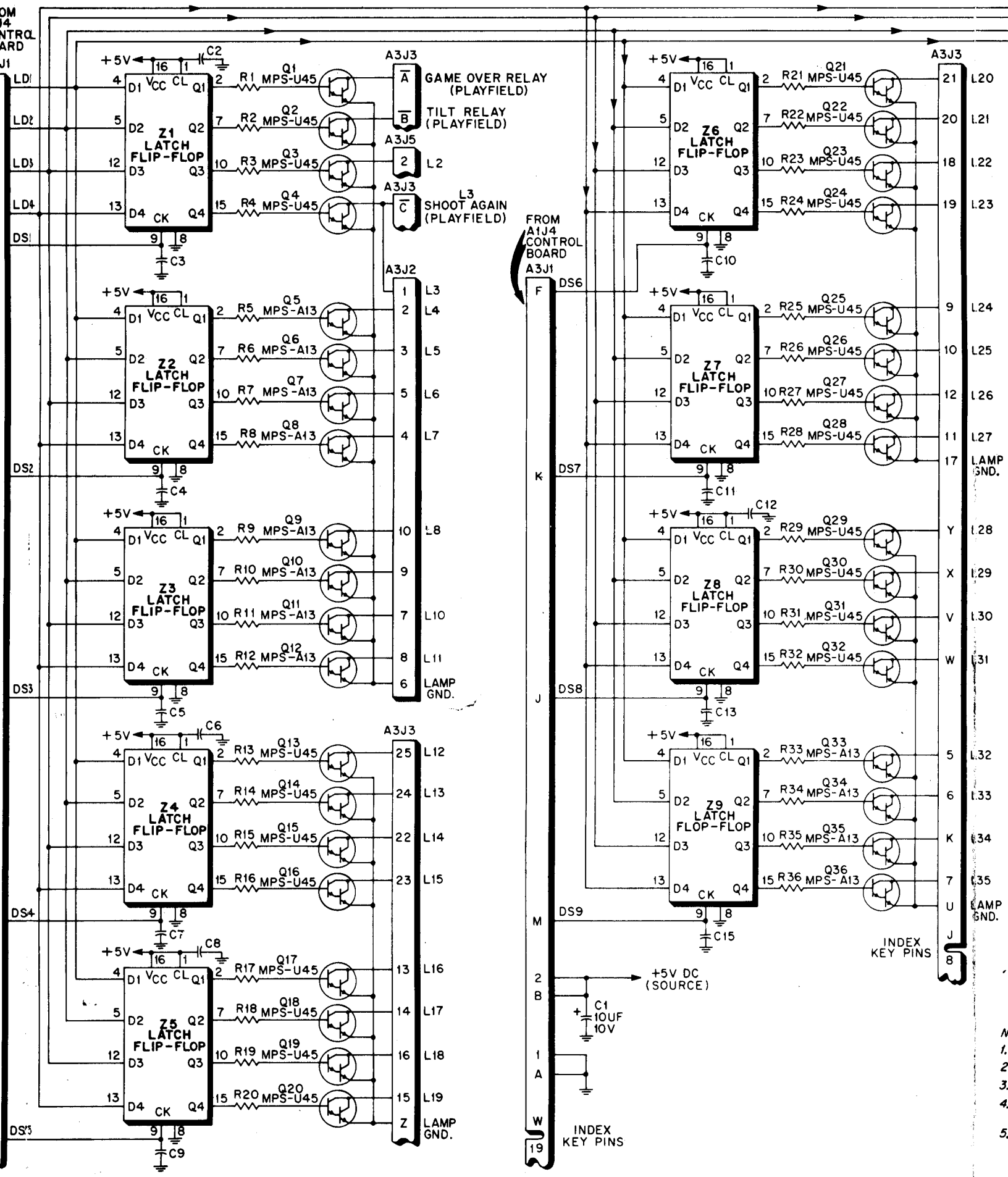
OM
J4
NTROL
ARD
J1
LD1
LD2
LD3
LD4
DS1
DS2
DS3
DS4
DS5
+5V
C2
C3
C4
C5
C6
C7
C8
C9
Z1 LATCH FLIP-FLOP
Z2 LATCH FLIP-FLOP
Z3 LATCH FLIP-FLOP
Z4 LATCH FLIP-FLOP
Z5 LATCH FLIP-FLOP
Z6 LATCH FLIP-FLOP
Z7 LATCH FLIP-FLOP
Z8 LATCH FLIP-FLOP
Z9 LATCH FLOP-FLOP
R1 MPS-U45
R2 MPS-U45
R3 MPS-U45
R4 MPS-U45
R5 MPS-A13
R6 MPS-A13
R7 MPS-A13
R8 MPS-A13
R9 MPS-A13
R10 MPS-A13
R11 MPS-A13
R12 MPS-A13
R13 MPS-U45
R14 MPS-U45
R15 MPS-U45
R16 MPS-U45
R17 MPS-U45
R18 MPS-U45
R19 MPS-U45
R20 MPS-U45
R21 MPS-U45
R22 MPS-U45
R23 MPS-U45
R24 MPS-U45
R25 MPS-U45
R26 MPS-U45
R27 MPS-U45
R28 MPS-U45
R29 MPS-U45
R30 MPS-U45
R31 MPS-U45
R32 MPS-U45
R33 MPS-A13
R34 MPS-A13
R35 MPS-A13
R36 MPS-A13
A3J3
GAME OVER RELAY (PLAYFIELD)
TILT RELAY (PLAYFIELD)
A3J5
L2
L3
SHOOT AGAIN (PLAYFIELD)
A3J2
L4
L5
L6
L7
L8
L10
L11
LAMP GND.
L12
L13
L14
L15
L16
L17
L18
L19
L20
L21
L22
L23
L24
L25
L26
L27
L28
L29
L30
L31
L32
L33
L34
L35
FROM A1J4 CONTROL BOARD
A3J1
DS6
DS7
DS8
DS9
+5V DC (SOURCE)
C1 10UF 10V
INDEX KEY PINS

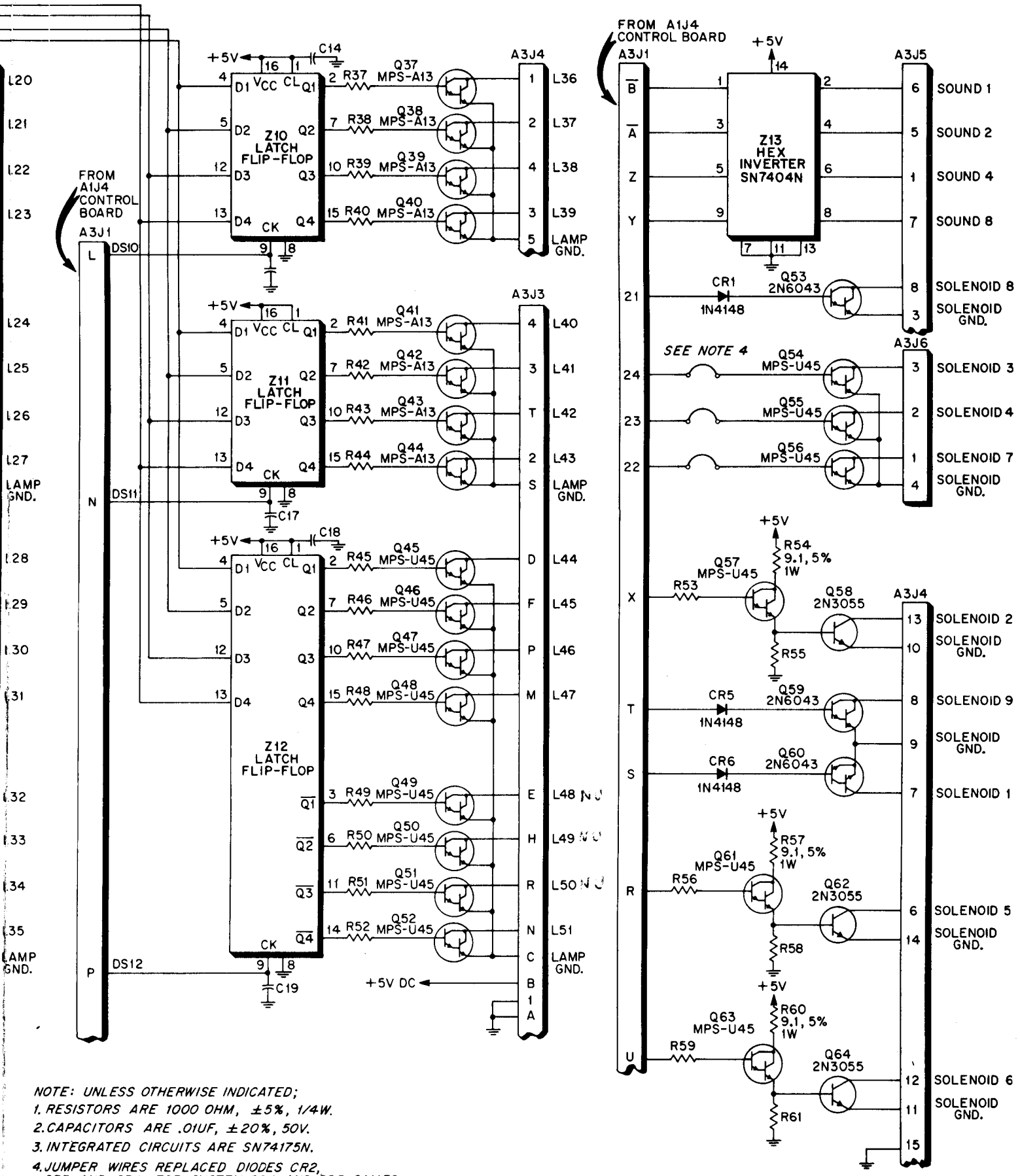

NOTE: UNLESS OTHERWISE INDICATED;
1. RESISTORS ARE 1000 OHM, ±5%, 1/4W.
2. CAPACITORS ARE .01UF, ±20%, 50V.
3. INTEGRATED CIRCUITS ARE SN74175N.
4. JUMPER WIRES REPLACED DIODES CR2, CR3 AND CR4 FOR SYSTEM 80A AND 80B GAMES.
5. TRANSISTOR TYPES MPS-U45 AND NDS-U45 ARE INTERCHANGEABLE.

Premier Technology			
TITLE DRIVER BOARD (A3)			
USED ON			
DRAWN	APPROVED BAM	DATE 12-12-80	E-20915

SERVICE NOTES

X. WIRING AND SCHEMATIC DIAGRAMS, PARTS LISTS

A5P1
1 +12V DC UNREGULATED INPUT
2 AUDIO INPUT
3 ANALOG GROUND
4 AUDIO OUTPUT
6 12V AC INPUT
7 12V AC RETURN
5 −12V DC REGULATED OUTPUT (SOURCE)
9 +24V DC UNREGULATED INPUT
10 +12V DC REGULATED OUTPUT (SOURCE)
8 DC GROUND

R1 2.7K
R2 100
C1 1.0UF 35V TANT.
U1 AUDIO AMPLIFIER LM2002
HEAT SINK
C2 1.0UF 35V TANT.
C3 1000UF 25V
R4 220 1/2W
R6 1.0 1/2W
C5 0.1UF
R3 100
C4 .01UF
C6 470UF 35V
R5 2.2
CR1 CR2 CR3 CR4 1N4004 (4)
−14.5V DC
C7 47UF 50V
R7 100 1/2W
VR1 1N4742A 12V, ±5% 1W
CR5 1N4004
R8 1K 2W
C8 47UF 50V
VR2 1N4742A 12V, ±5% 1W

AUXILIARY POWER SUPPLY (A5) COMPONENT LOCATION

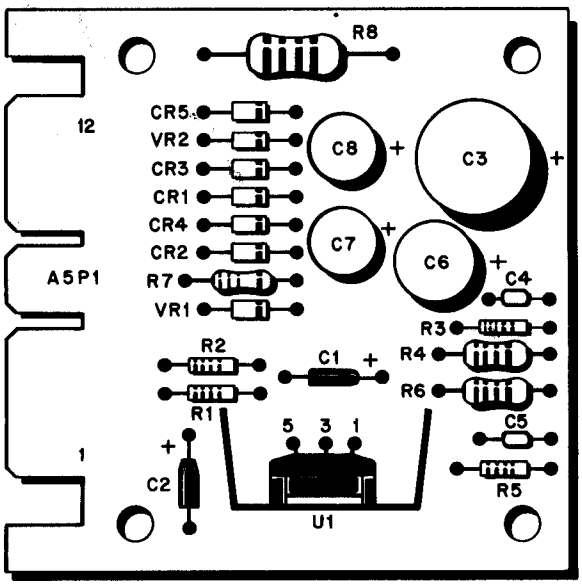

Premier Technology			
TITLE AUXILIARY POWER SUPPLY (A5)			
USED ON			
DRAWN	APPROVED R.H.M.	DATE 9-OCT-85	E-24715

AUXILIARY POWER SUPPLY (A5) PARTS LIST

REFERENCE	DESCRIPTION	PART NUMBER
	Auxiliary Power Supply	MA-767
C1,C2	Capacitor, 1UF, 10%, 35V, TANT	XO-715
C3	Capacitor, 1000UF, 25V	XO-874
C4	Capacitor, .01UF, +80% -20%, 50V	XO-229
C5	Capacitor, 0.1UF, +80% -20%, 50V	XO-230
C6	Capacitor, 470UF, 35V	XO-284
C7,C8	Capacitor, 47UF, 50V	XO-210
CR1-CR5	Diode, 1N4004	XO-254
R1	Resistor, 2.7K Ohm, 5%, 1/4W	XO-6
R2,R3	Resistor, 100 Ohm, 5%, 1/4W	XO-28
R4	Resistor, 220 Ohm, 5%, 1/2W	XO-185
R5	Resistor, 2.2 Ohm, 5%, 1/4W	XO-595
R6	Resistor, 1 Ohm, 5%, 1/2W	XO-593
R7	Resistor, 100 Ohm, 5%, 1/2W	XO-52
R8	Resistor, 1K Ohm, 5%, 2W	XO-627
U1	Audio Amplifier, LM2002	XO-550
VR1,VR2	Diode, Zener, 1N4742A, 12V, ±5%, 1W	XO-257
	Heat Sink	XO-472

X. WIRING AND SCHEMATIC DIAGRAMS, PARTS LISTS

SOUND BOARD (A6) COMPONENT LOCATION

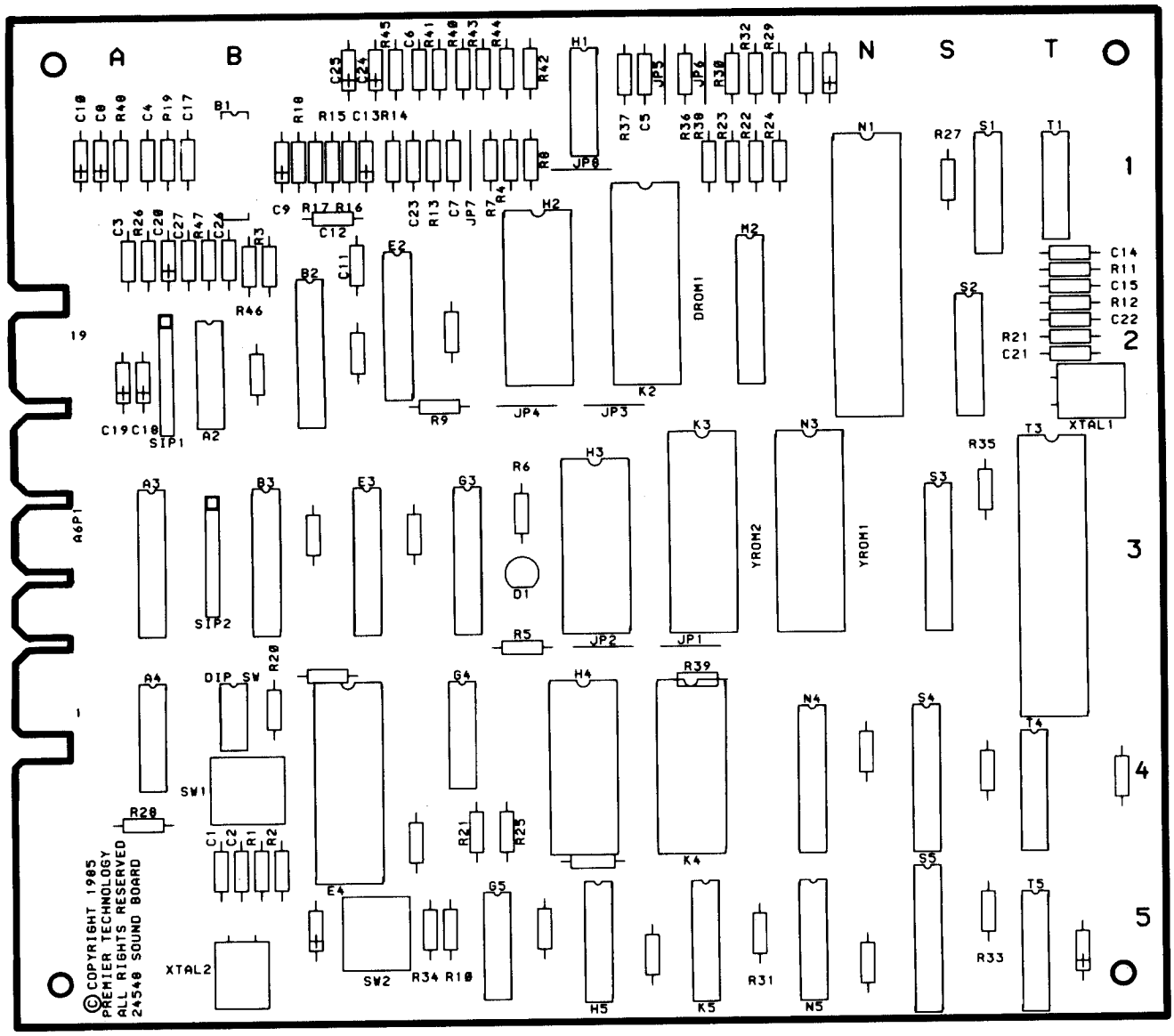

SOUND BOARD (A6) PARTS LIST

REFERENCE	DESCRIPTION	PART NUMBER
	Sound Board Assembly (A6)	MA766
C1,C2	Capacitor, 22PF, 50V MONO AX-CM, 10%	XO-633
C5,C6	Capacitor, .01UF, 50V AX-CM, 10%	XO-696
C7,C17,C23	Capacitor, 1UF, 50V CM-RD Non-Polarized	XO-294
C8,C9,C10, C18,C19,C24, C25,and ALL UNMARKED POLARIZED CAPACITORS	Capacitor, 10UF, 25V TANT-AX, 10%, Polarized	XO-127
C11,C12	Capacitor, 10PF, 50V AX-CM +80%-20%	XO-635
C13,C20	Capacitor, 1UF, 35V TANT-AX, 10%	XO-715
C14	Capacitor, 68PF, 50V MONO AX-CM, 10%	XO-636
C15	Capacitor, .047UF, 50V MONO AX-CM, 20%	XO-638
C21,and ALL UNMARKED CAPACITORS	Capacitor, 0.1UF, 50V AX-CM, +80%-20%	XO-230
C26,C27	Capacitor, .022UF, 50V AX-CM, 10%	XO-873
D1	Diode, MV5752	XO-270
DIP SW	Dip Switch, 4 Position, 8 Pin	XO-640
R1	Resistor, 10M Ohm, 5%, 1/4W	XO-73
R2,R5,R9 R10,R27,R28, R31,R33-R35, R39	Resistor, 1K Ohm, 5%, 1/4W	XO-5
R3,R20	Resistor, 4.7K Ohm, 5%, 1/4W	XO-7
R4,R7,R8 R22-R24	Resistor, 68 Ohm, 5%, 1/4W	XO-748
R6	Resistor, 240 Ohm, 5%, 1/4W	XO-173
R11,R12	Resistor, 470 Ohm, 5%, 1/4W	XO-35
R13,R14,R18, R21,R25	Resistor, 3K Ohm, 5%, 1/4W	XO-23
R15	Resistor, 1.2K Ohm, 5%, 1/4W	XO-175
R16,R17,R19	Resistor, 10K Ohm, 5%, 1/4W	XO-18
R29,R30,R32, R37,R38,R40-R44		
R36,R45-R48	Resistor, 33K Ohm, 5%, 1/4W	XO-43
SIP1,SIP2	Resistor Pack, SIP, 1K Ohm, 9 Pin	XO-493
SW1,SW2	Switch, Push Button, N.O.	XO-365
XTAL 1	Crytsal, 4.0 MHZ	XO-366
XTAL 2	Crystal, 3.12 MHZ	XO-639
A2	7430 8-input "NAND" gate	XO-643
A3,B2	74LS374 Octal D-type flip flop	XO-96
A4	74LS74 Dual D-type flip flop	XO-434
B1,H1	LM324 Quad op-amp	XO-644
B3	74LS244 Octal buffer/driver	XO-117
E2	AD7528J DAC	XO-647
E3,G3,N4,S5	74LS374 Octal D-type flip flop	XO-96
E4	SP0250 Speech generator	XO-645
G4,T1	74LS04 Hex Inverter	XO-418
G5	74HC08 Quad 2-input "AND" gate	XO-872
H2,H3	2K x 8 RAM (6116) (200NS)	XO-191
H4,K4	AY-3-8913 Sound generator	XO-646
H5,K5,N5, S1,T5	74161 Synchronous presettable binary counter	XO-192
K2,K3,N3	2764 EProm	XO-489
N1,T3	R6502-13 CPU	XO-360
M2,S3	74LS245 Octal bus transceiver	XO-79
S2	74LS139 Dual 1 of 4 decoder	XO-419
T4	74LS138 1 of 8 decoder/ demultiplexor	XO-437
	28 Pin Dip Socket (4)	XO-536
	Jumper, 22 GA (5)	XO-469

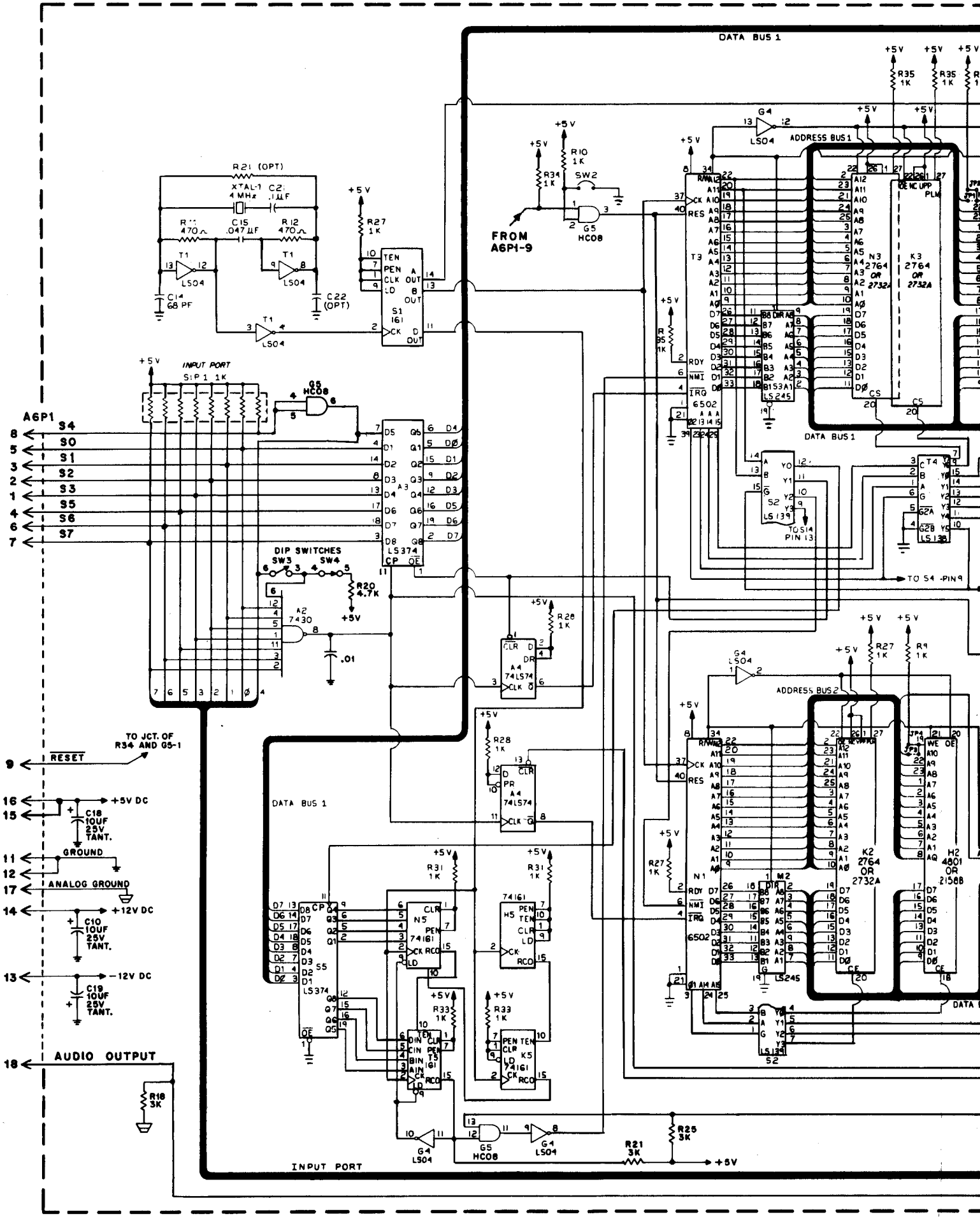
DATA BUS 1
ADDRESS BUS 1
ADDRESS BUS 2
INPUT PORT
FROM A6P1-9
TO JCT. OF R34 AND G5-1
RESET
+5V DC
GROUND
ANALOG GROUND
+12V DC
-12V DC
AUDIO OUTPUT
DIP SWITCHES
N3 2764 OR 2732A
K3 2764 OR 2732A
K2 2764 OR 2732A
H2 4801 OR 2158B
6502
LS374
74LS74
74161
LS245
LS139
LS04
HC08
7430

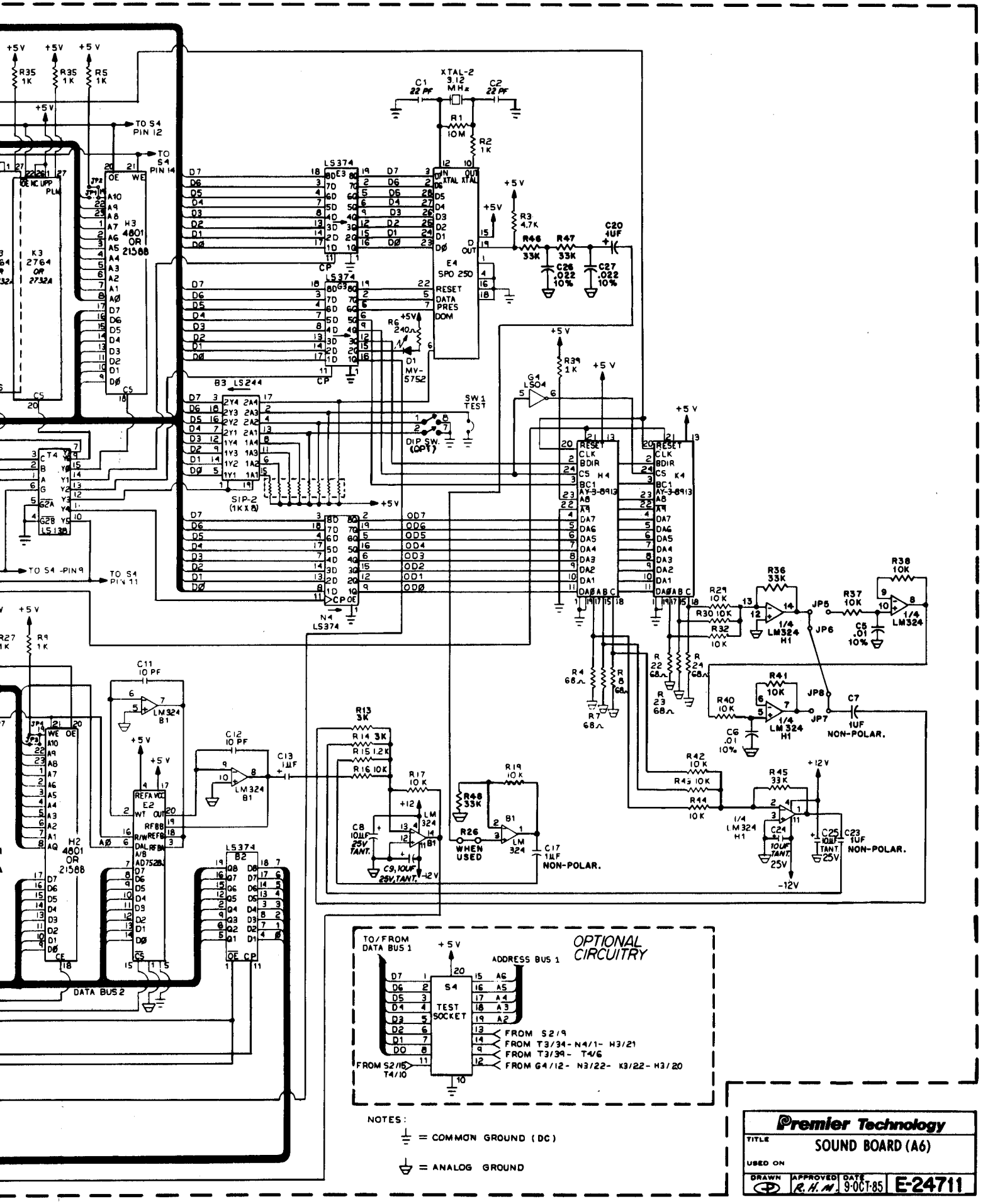
OPTIONAL CIRCUITRY
TO/FROM DATA BUS 1
ADDRESS BUS 1
S4 TEST SOCKET
FROM S2/9
FROM T3/34- N4/1- H3/21
FROM T3/39- T4/6
FROM G4/12- N3/22- K3/22- H3/20
FROM S2/15 T4/10
NOTES:
= COMMON GROUND (DC)
= ANALOG GROUND
Premier Technology
TITLE
SOUND BOARD (A6)
USED ON
DRAWN
APPROVED R.H.M.
DATE 9-OCT-85
E-24711

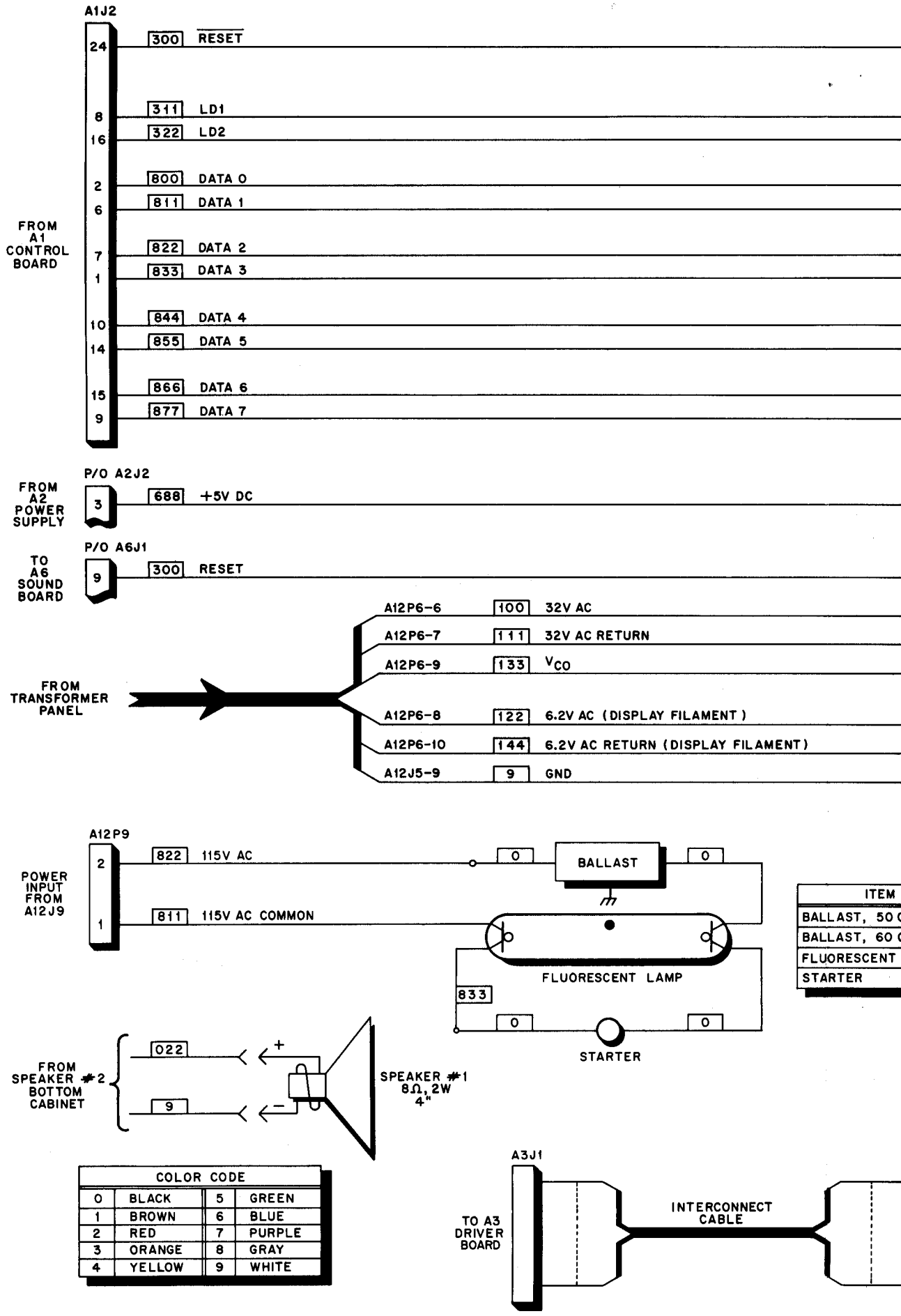
A1J2
FROM A1 CONTROL BOARD
24 300 RESET
8 311 LD1
16 322 LD2
2 800 DATA 0
6 811 DATA 1
7 822 DATA 2
1 833 DATA 3
10 844 DATA 4
14 855 DATA 5
15 866 DATA 6
9 877 DATA 7
FROM A2 POWER SUPPLY
P/O A2J2
3 688 +5V DC
TO A6 SOUND BOARD
P/O A6J1
9 300 RESET
FROM TRANSFORMER PANEL
A12P6-6 100 32V AC
A12P6-7 111 32V AC RETURN
A12P6-9 133 VCO
A12P6-8 122 6.2V AC (DISPLAY FILAMENT)
A12P6-10 144 6.2V AC RETURN (DISPLAY FILAMENT)
A12J5-9 9 GND
A12P9
POWER INPUT FROM A12J9
2 822 115V AC
1 811 115V AC COMMON
0
BALLAST
0
FLUORESCENT LAMP
833
0
0
STARTER
ITEM
BALLAST, 50
BALLAST, 60
FLUORESCENT
STARTER
FROM SPEAKER #2 BOTTOM CABINET
022
9
+
−
SPEAKER #1
8Ω, 2W
4"
COLOR CODE
0 BLACK 5 GREEN
1 BROWN 6 BLUE
2 RED 7 PURPLE
3 ORANGE 8 GRAY
4 YELLOW 9 WHITE
A3J1
TO A3 DRIVER BOARD
INTERCONNECT CABLE

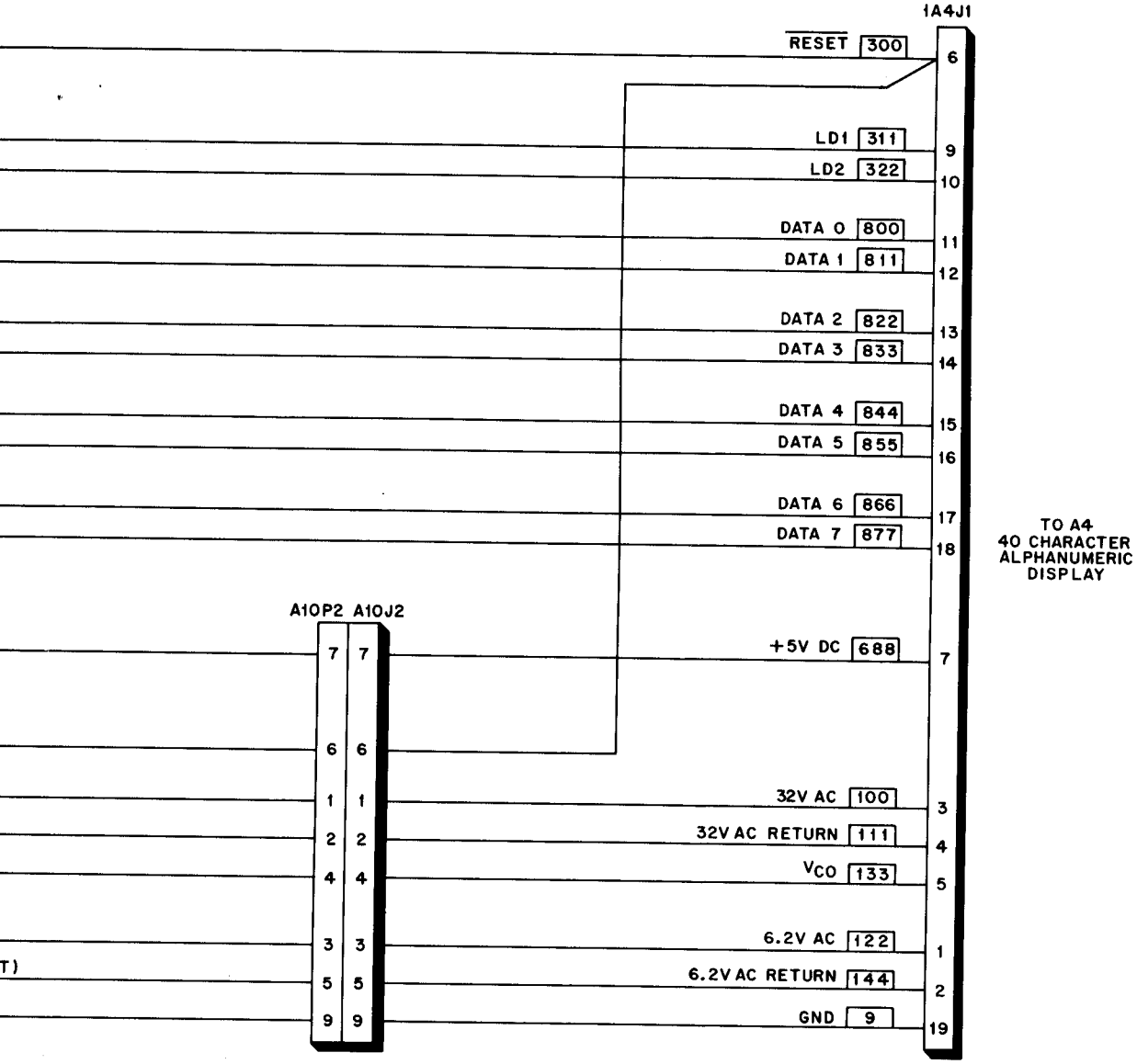

ITEM	PART NO.
BALLAST, 50 CYCLE	24672
BALLAST, 60 CYCLE	24673
FLUORESCENT LAMP	24674
STARTER	24675

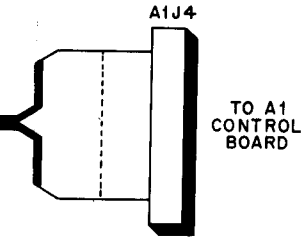

Premier Technology			
TITLE LIGHTBOX. SCHEMATIC/ WIRING DIAGRAM			
DRAWN	APPROVED R.H.M.	DATE 9-OCT-85	E-24712

X. WIRING AND SCHEMATIC DIAGRAMS, PARTS LISTS

DISPLAY BOARD (A4) COMPONENT LOCATION

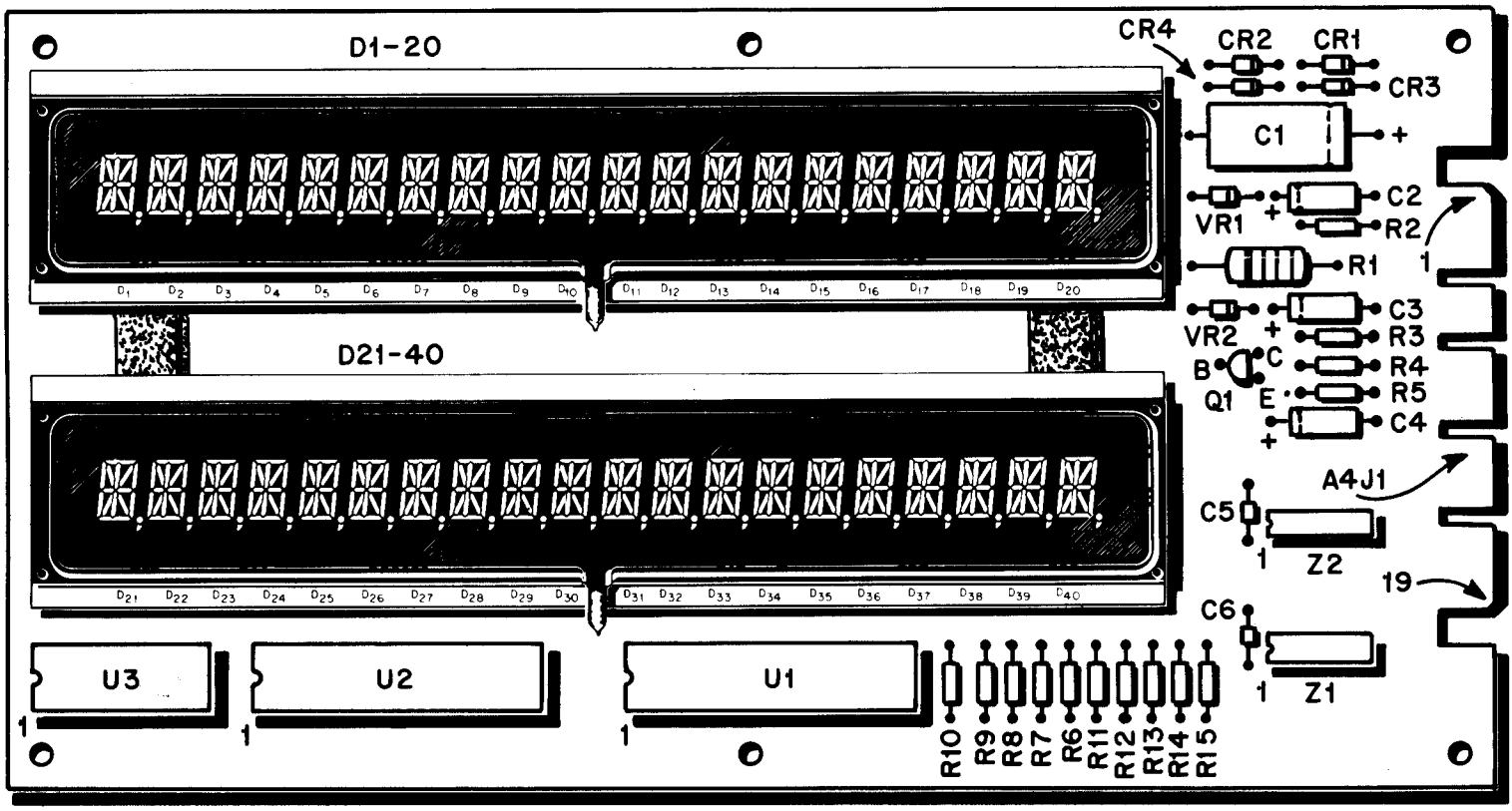

DISPLAY BOARD (A4) PARTS LIST

REFERENCE	DESCRIPTION	PART NUMBER
	Display Board (A4)	MA644
C1	Capacitor, 470UF, 50V	XO-847
C2, C3, C4	Capacitor, 10UF, 16V	XO-846
C5, C6	Capacitor, .01UF, +80% -20%	XO-229
CR1-CR4	Diode, 1N4004	XO-254
DS1, DS2	Display, Alphanumeric	XO-840
Q1	Transistor, PNP, 2N3906	XO-588
R1	Resistor, 1K, 5%, 2W	XO-627
R2, R4	Resistor, 10K, 5%, 1/4W	XO-18
R3	Resistor, 22K, 5%, 1/4W	XO-42
R5	Resistor, 3K, 5%, 1/4W	XO-23
R6-R15	Resistor, 4.7K, 5%, 1/4W	XO-7
U1, U2	IC, Digit Drivers, 10939	XO-841
U3	IC, Segment Drivers, 10941	XO-842
VR1	Diode, Zener, 1N4737A, 7.5V	XO-844
VR2	Diode, Zener, 1N4744A, 15V	XO-843
Z1, Z2	IC, Hex Buffer, 7417	XO-406
	Tape, Vinyl Foam	24127-1

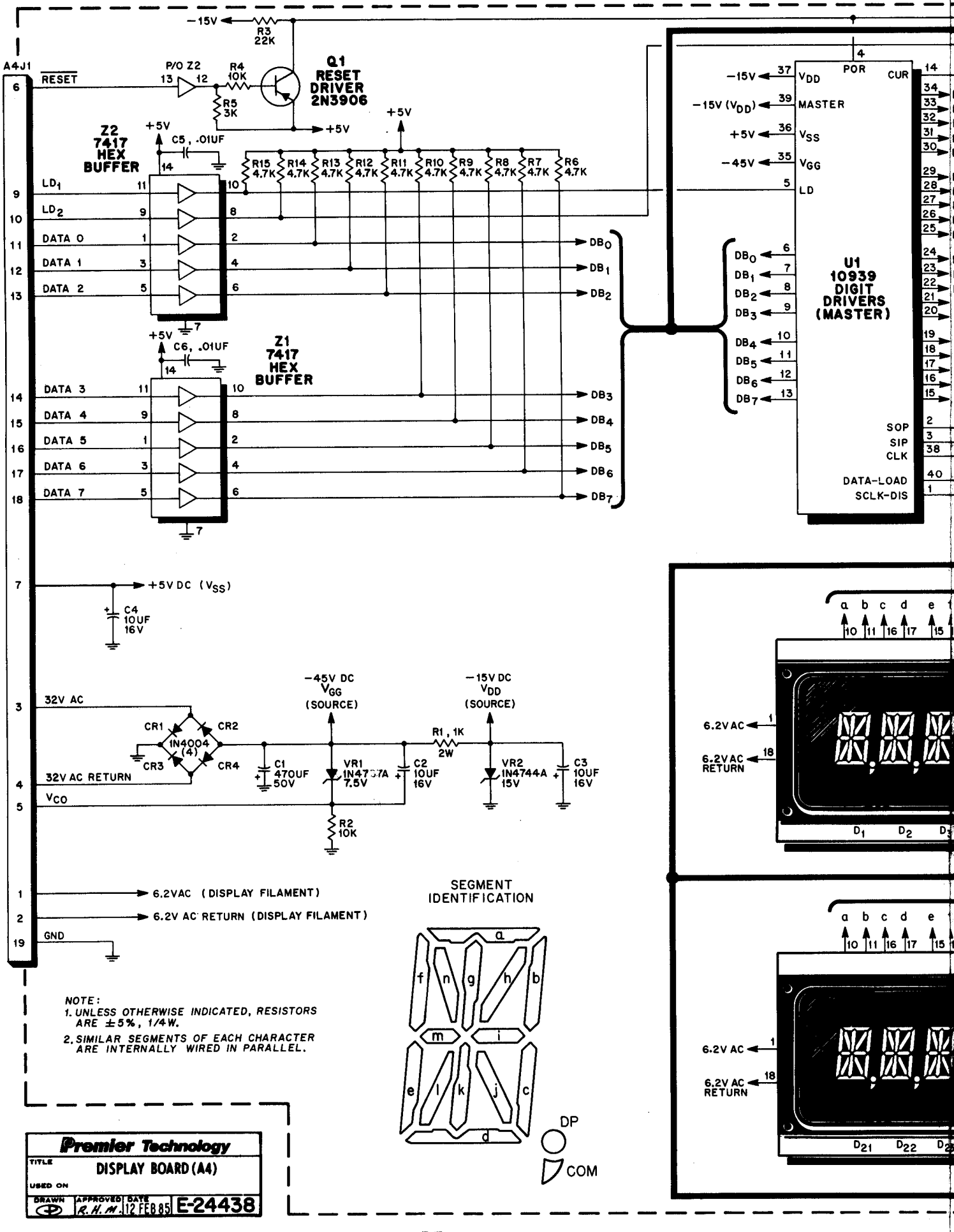
A4J1
RESET
P/O Z2
R4 10K
R5 3K
R3 22K
-15V
Q1 RESET DRIVER 2N3906
+5V
Z2 7417 HEX BUFFER
C5, .01UF
R15 4.7K
R14 4.7K
R13 4.7K
R12 4.7K
R11 4.7K
R10 4.7K
R9 4.7K
R8 4.7K
R7 4.7K
R6 4.7K
LD1
LD2
DATA 0
DATA 1
DATA 2
DB0
DB1
DB2
C6, .01UF
Z1 7417 HEX BUFFER
DATA 3
DATA 4
DATA 5
DATA 6
DATA 7
DB3
DB4
DB5
DB6
DB7
U1 10939 DIGIT DRIVERS (MASTER)
POR
CUR
VDD
MASTER
VSS
VGG
LD
SOP
SIP
CLK
DATA-LOAD
SCLK-DIS
+5V DC (VSS)
C4 10UF 16V
32V AC
32V AC RETURN
VCO
CR1
CR2
CR3
CR4
1N4004 (4)
C1 470UF 50V
-45V DC VGG (SOURCE)
VR1 1N4757A 7.5V
C2 10UF 16V
R1, 1K 2W
-15V DC VDD (SOURCE)
VR2 1N4744A 15V
C3 10UF 16V
R2 10K
6.2VAC (DISPLAY FILAMENT)
6.2V AC RETURN (DISPLAY FILAMENT)
GND
6.2VAC
6.2VAC RETURN
SEGMENT IDENTIFICATION
DP
COM
NOTE:
1. UNLESS OTHERWISE INDICATED, RESISTORS ARE ±5%, 1/4W.
2. SIMILAR SEGMENTS OF EACH CHARACTER ARE INTERNALLY WIRED IN PARALLEL.
Premier Technology
TITLE
DISPLAY BOARD (A4)
USED ON
DRAWN
APPROVED R.H.M.
DATE 12 FEB 85
E-24438

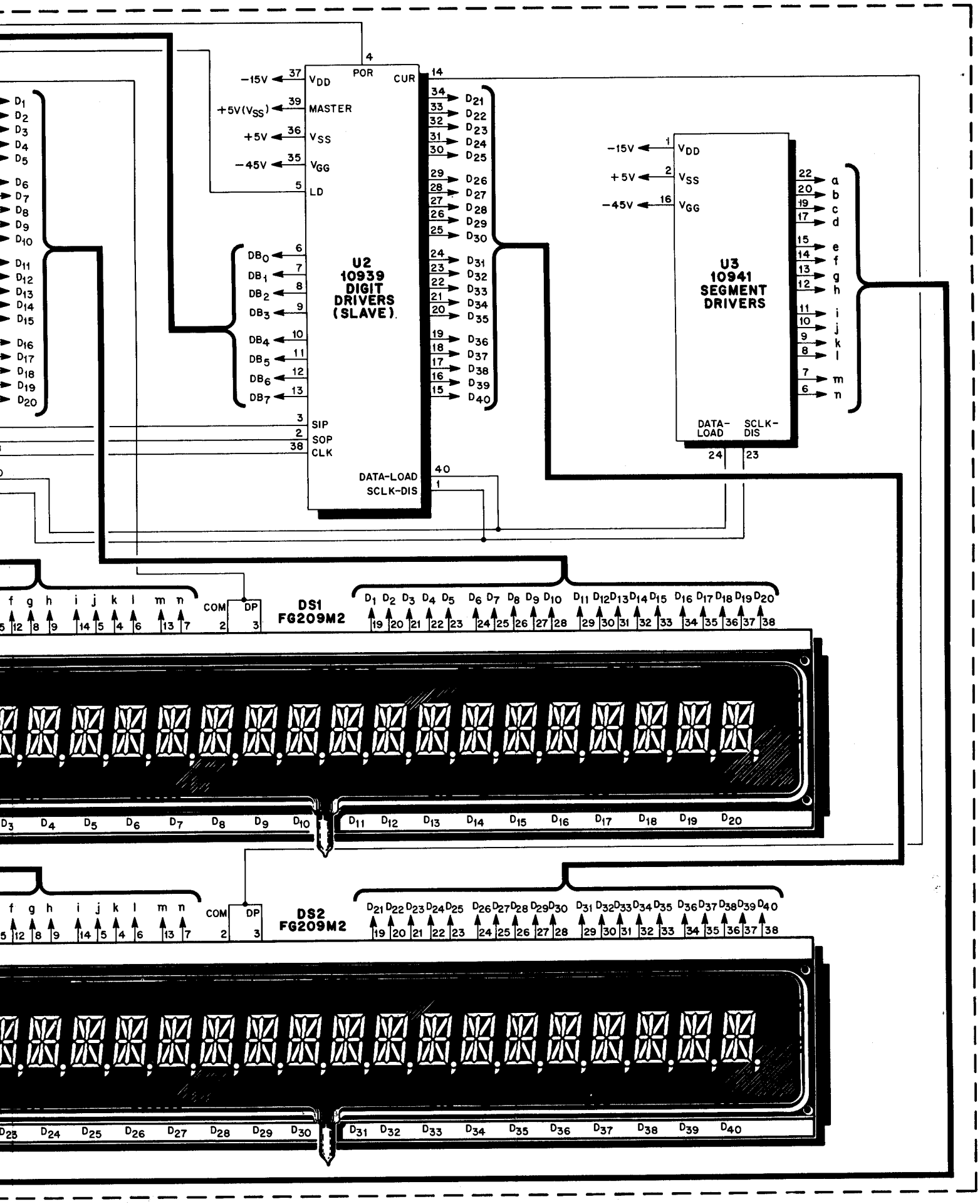
U2
10939
DIGIT
DRIVERS
(SLAVE)
U3
10941
SEGMENT
DRIVERS
DS1
FG209M2
DS2
FG209M2
VDD
VSS
VGG
MASTER
LD
POR
CUR
SIP
SOP
CLK
DATA-LOAD
SCLK-DIS
COM
DP
−15V
+5V(VSS)
+5V
−45V

X. WIRING AND SCHEMATIC DIAGRAMS, PARTS LISTS

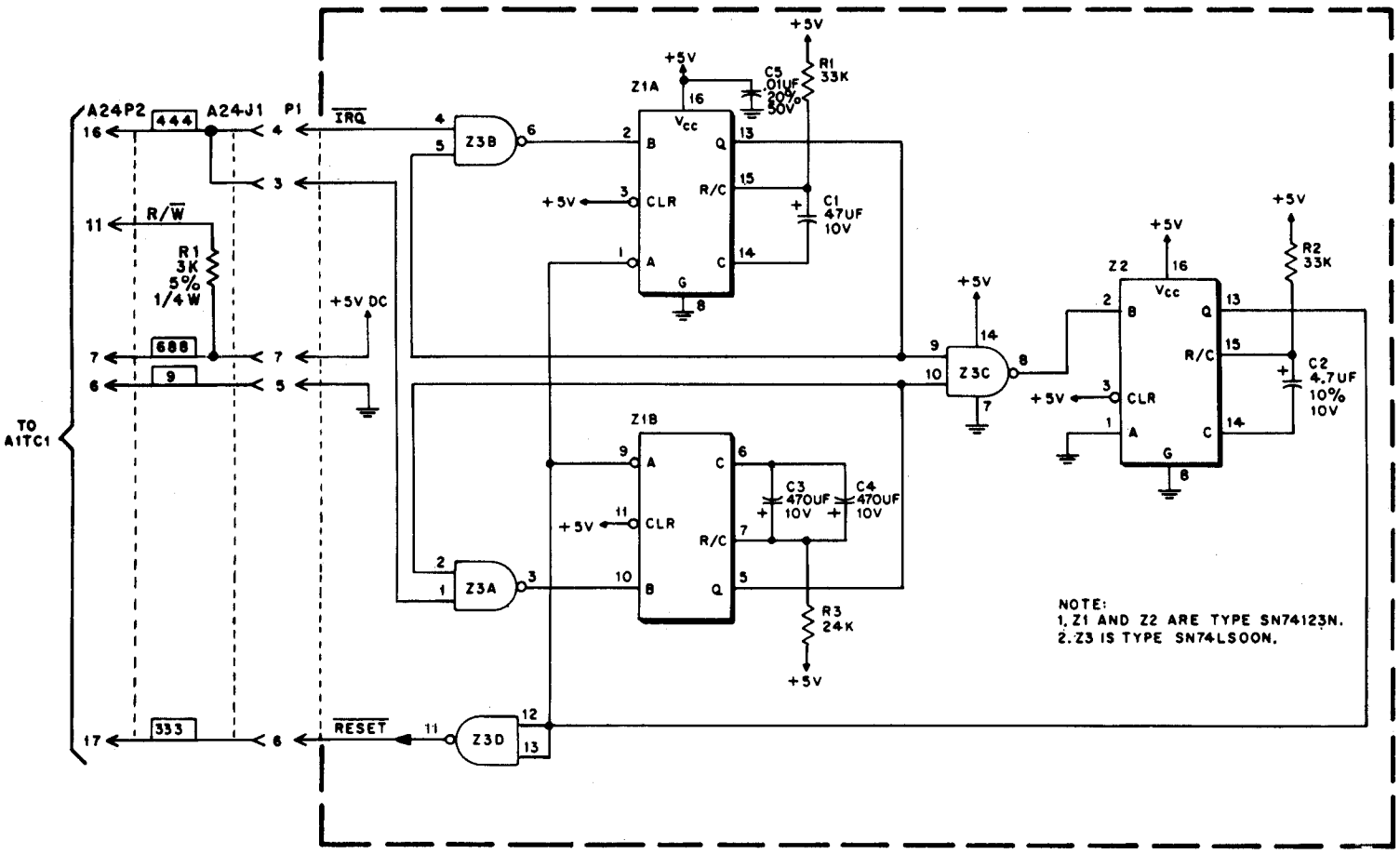

Premier Technology			
TITLE RESET CIRCUIT BOARD			
USED ON			
DRAWN	APPROVED BAM	DATE 4-2-81	C-21063

RESET BOARD (A24) COMPONENT LOCATION

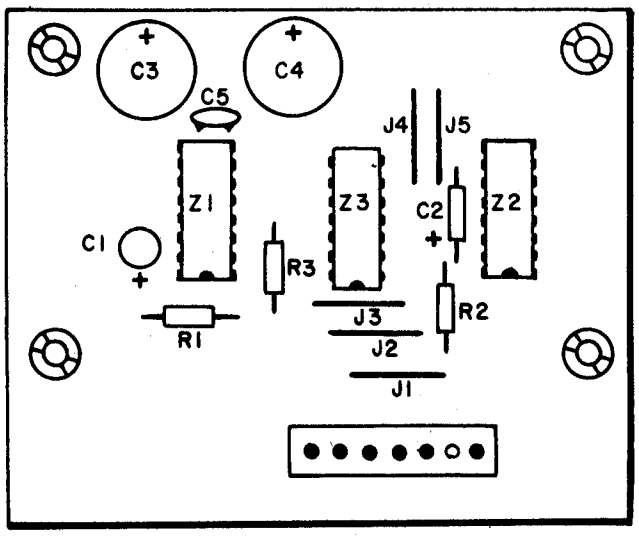

RESET BOARD (A24) PARTS LIST

REFERENCE	DESCRIPTION	PART NUMBER
	RESET BOARD	MA-164
R1, R2	Resistor 33K ohm, 5%, ¼W.	XO-43
R3	Resistor 24K ohm, 5%, ¼W.	XO-10
C1	Capacitor 47 µfd., 10V.	XO-227
C2	Capacitor 4.7 µfd., 10V.	XO-226
C3, C4	Capacitor 470 µfd., 16V.	XO-214
C5	Capacitor .01 µfd.	XO-202
Z1, Z2	IC 74123N	XO-398
Z3	IC 74LS00N	XO-427
	7 Pin Connector	XO-526

X. WIRING AND SCHEMATIC DIAGRAMS, PARTS LISTS

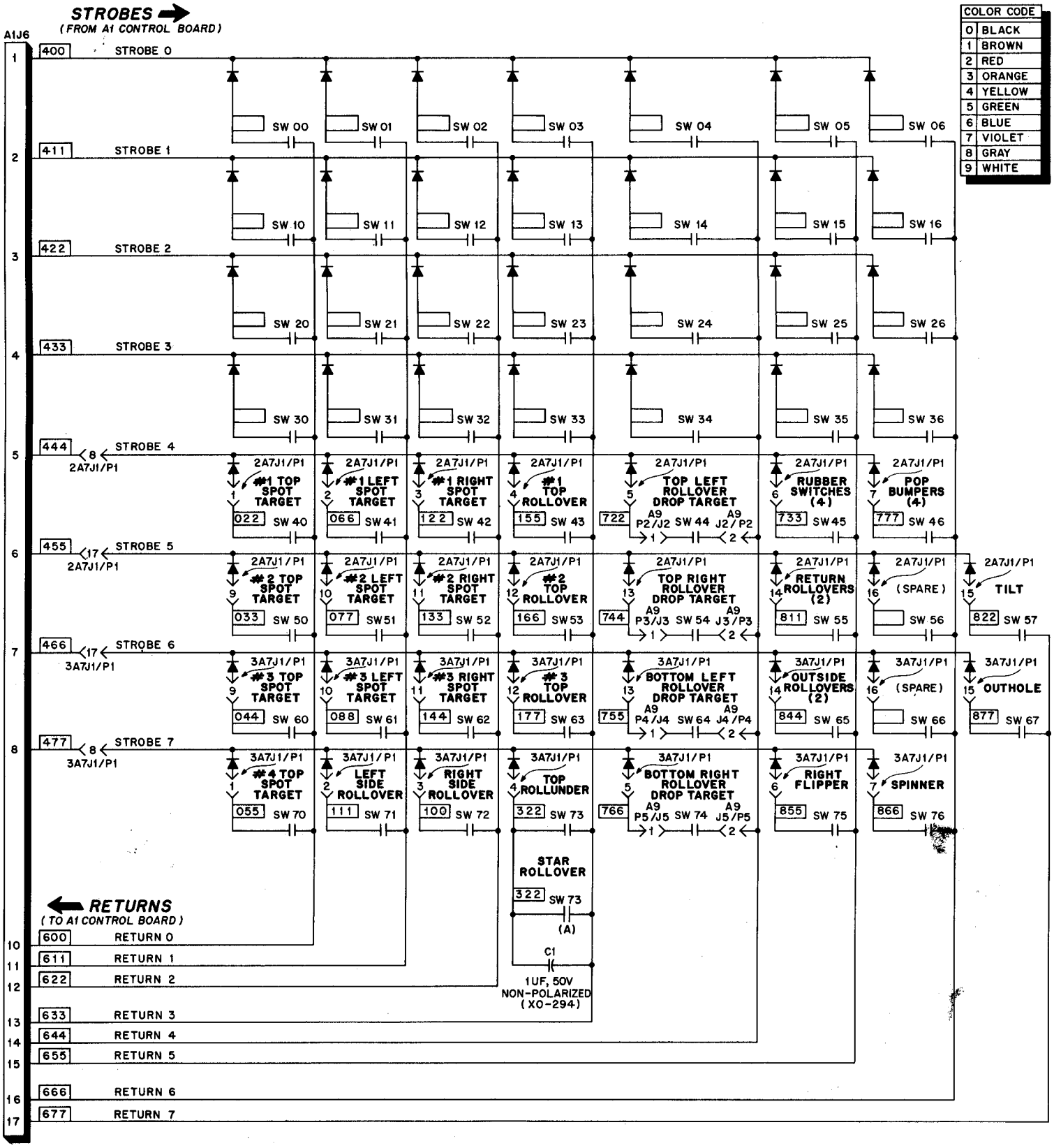

NOTE:
1. DIODES USED ARE TYPE 1N270.
2. DIODE BOARDS 2A7 AND 3A7 PART NO.'S 24030.

Premier Technology			
TITLE	SWITCH MATRIX		
USED ON	GAME #702		
DRAWN	APPROVED R.H.M.	DATE 9 DEC 85	E-24876

PLAYBOARD "CONTROLLED" SOLENOIDS AND ILLUMINATION

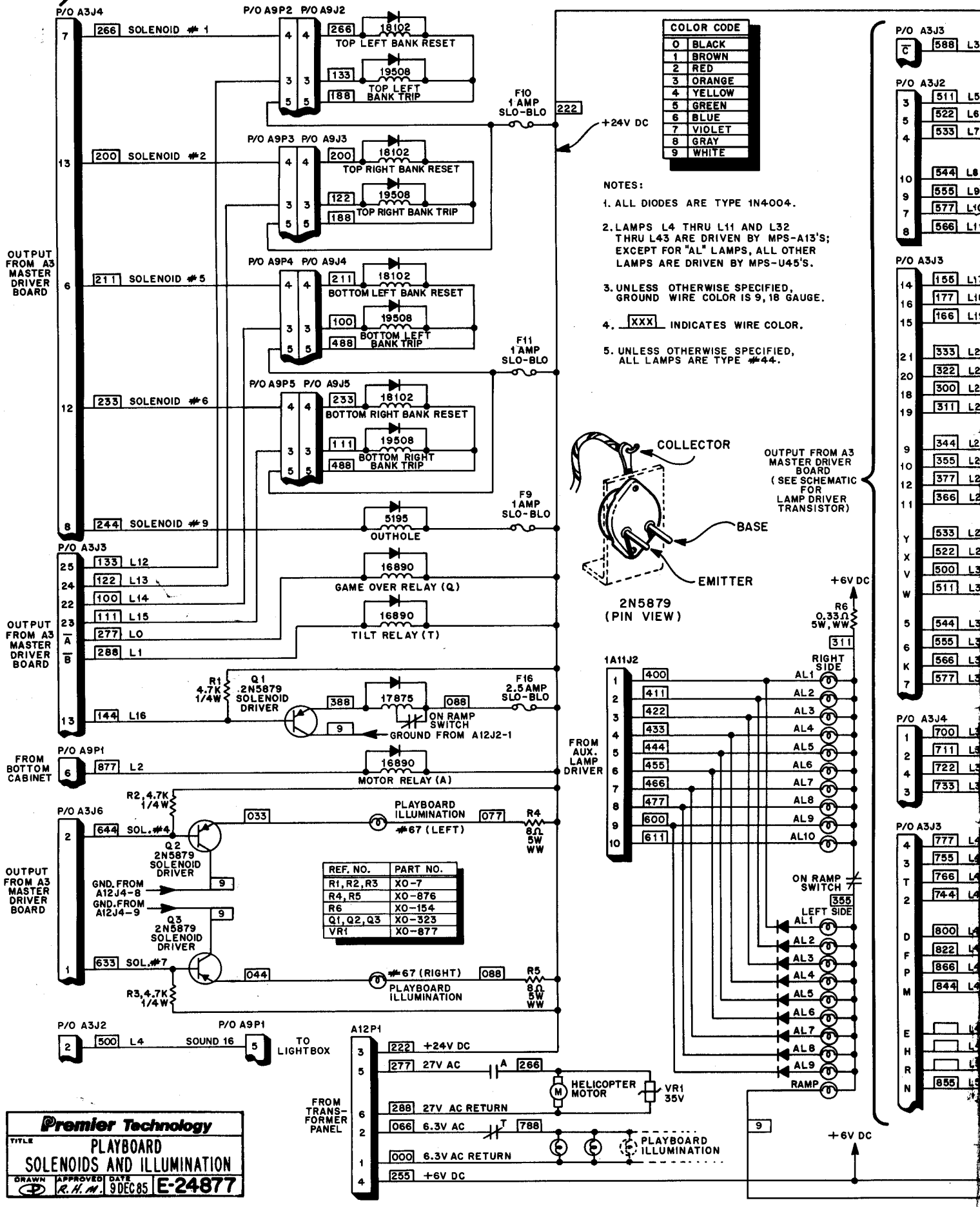

COLOR CODE	
0	BLACK
1	BROWN
2	RED
3	ORANGE
4	YELLOW
5	GREEN
6	BLUE
7	VIOLET
8	GRAY
9	WHITE

NOTES:

1. ALL DIODES ARE TYPE 1N4004.
2. LAMPS L4 THRU L11 AND L32 THRU L43 ARE DRIVEN BY MPS-A13'S; EXCEPT FOR "AL" LAMPS, ALL OTHER LAMPS ARE DRIVEN BY MPS-U45'S.
3. UNLESS OTHERWISE SPECIFIED, GROUND WIRE COLOR IS 9, 18 GAUGE.
4. XXX INDICATES WIRE COLOR.
5. UNLESS OTHERWISE SPECIFIED, ALL LAMPS ARE TYPE #44.

REF. NO.	PART NO.
R1, R2, R3	XO-7
R4, R5	XO-876
R6	XO-154
Q1, Q2, Q3	XO-323
VR1	XO-877

Premier Technology

TITLE: PLAYBOARD SOLENOIDS AND ILLUMINATION

DRAWN | APPROVED R.H.M. | DATE 9 DEC 85 | E-24877

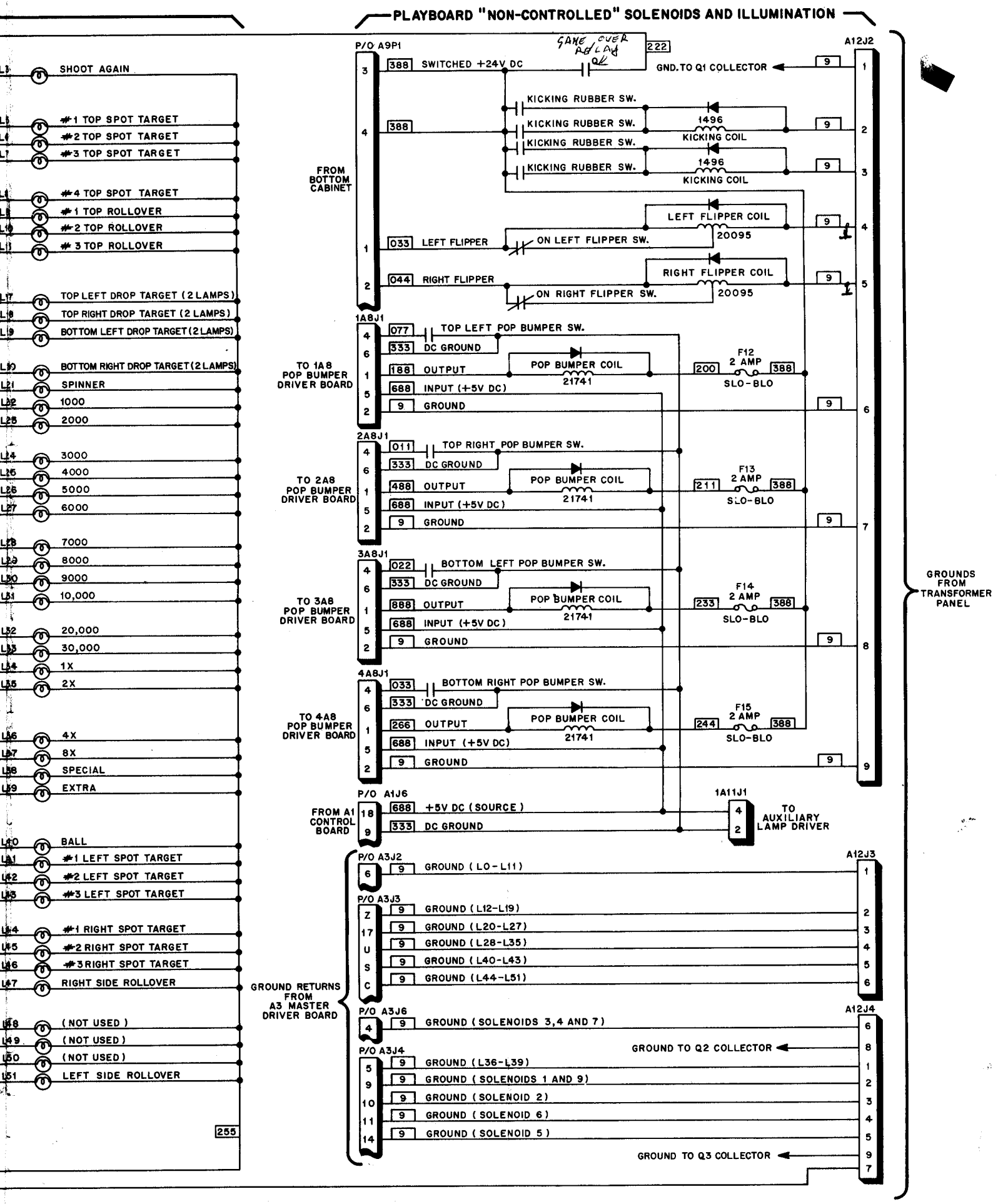
PLAYBOARD "NON-CONTROLLED" SOLENOIDS AND ILLUMINATION
SHOOT AGAIN
#1 TOP SPOT TARGET
#2 TOP SPOT TARGET
#3 TOP SPOT TARGET
#4 TOP SPOT TARGET
#1 TOP ROLLOVER
#2 TOP ROLLOVER
#3 TOP ROLLOVER
TOP LEFT DROP TARGET (2 LAMPS)
TOP RIGHT DROP TARGET (2 LAMPS)
BOTTOM LEFT DROP TARGET (2 LAMPS)
BOTTOM RIGHT DROP TARGET (2 LAMPS)
SPINNER
1000
2000
3000
4000
5000
6000
7000
8000
9000
10,000
20,000
30,000
1X
2X
4X
8X
SPECIAL
EXTRA
BALL
#1 LEFT SPOT TARGET
#2 LEFT SPOT TARGET
#3 LEFT SPOT TARGET
#1 RIGHT SPOT TARGET
#2 RIGHT SPOT TARGET
#3 RIGHT SPOT TARGET
RIGHT SIDE ROLLOVER
(NOT USED)
(NOT USED)
(NOT USED)
LEFT SIDE ROLLOVER
255
P/O A9P1
FROM BOTTOM CABINET
388 SWITCHED +24V DC
GAME OVER RELAY
222
GND. TO Q1 COLLECTOR
KICKING RUBBER SW.
1496 KICKING COIL
033 LEFT FLIPPER
ON LEFT FLIPPER SW.
LEFT FLIPPER COIL
20095
044 RIGHT FLIPPER
ON RIGHT FLIPPER SW.
RIGHT FLIPPER COIL
A12J2
1A8J1
TO 1A8 POP BUMPER DRIVER BOARD
077 TOP LEFT POP BUMPER SW.
333 DC GROUND
188 OUTPUT
688 INPUT (+5V DC)
9 GROUND
POP BUMPER COIL
21741
F12 2 AMP SLO-BLO
200
2A8J1
TO 2A8 POP BUMPER DRIVER BOARD
011 TOP RIGHT POP BUMPER SW.
488 OUTPUT
F13 2 AMP SLO-BLO
211
3A8J1
TO 3A8 POP BUMPER DRIVER BOARD
022 BOTTOM LEFT POP BUMPER SW.
888 OUTPUT
F14 2 AMP SLO-BLO
233
4A8J1
TO 4A8 POP BUMPER DRIVER BOARD
033 BOTTOM RIGHT POP BUMPER SW.
266 OUTPUT
F15 2 AMP SLO-BLO
244
P/O A1J6
FROM A1 CONTROL BOARD
688 +5V DC (SOURCE)
333 DC GROUND
1A11J1
TO AUXILIARY LAMP DRIVER
GROUNDS FROM TRANSFORMER PANEL
GROUND RETURNS FROM A3 MASTER DRIVER BOARD
P/O A3J2
GROUND (L0-L11)
A12J3
P/O A3J3
GROUND (L12-L19)
GROUND (L20-L27)
GROUND (L28-L35)
GROUND (L40-L43)
GROUND (L44-L51)
P/O A3J6
GROUND (SOLENOIDS 3,4 AND 7)
A12J4
GROUND TO Q2 COLLECTOR
P/O A3J4
GROUND (L36-L39)
GROUND (SOLENOIDS 1 AND 9)
GROUND (SOLENOID 2)
GROUND (SOLENOID 6)
GROUND (SOLENOID 5)
GROUND TO Q3 COLLECTOR

X. WIRING AND SCHEMATIC DIAGRAMS, PARTS LISTS

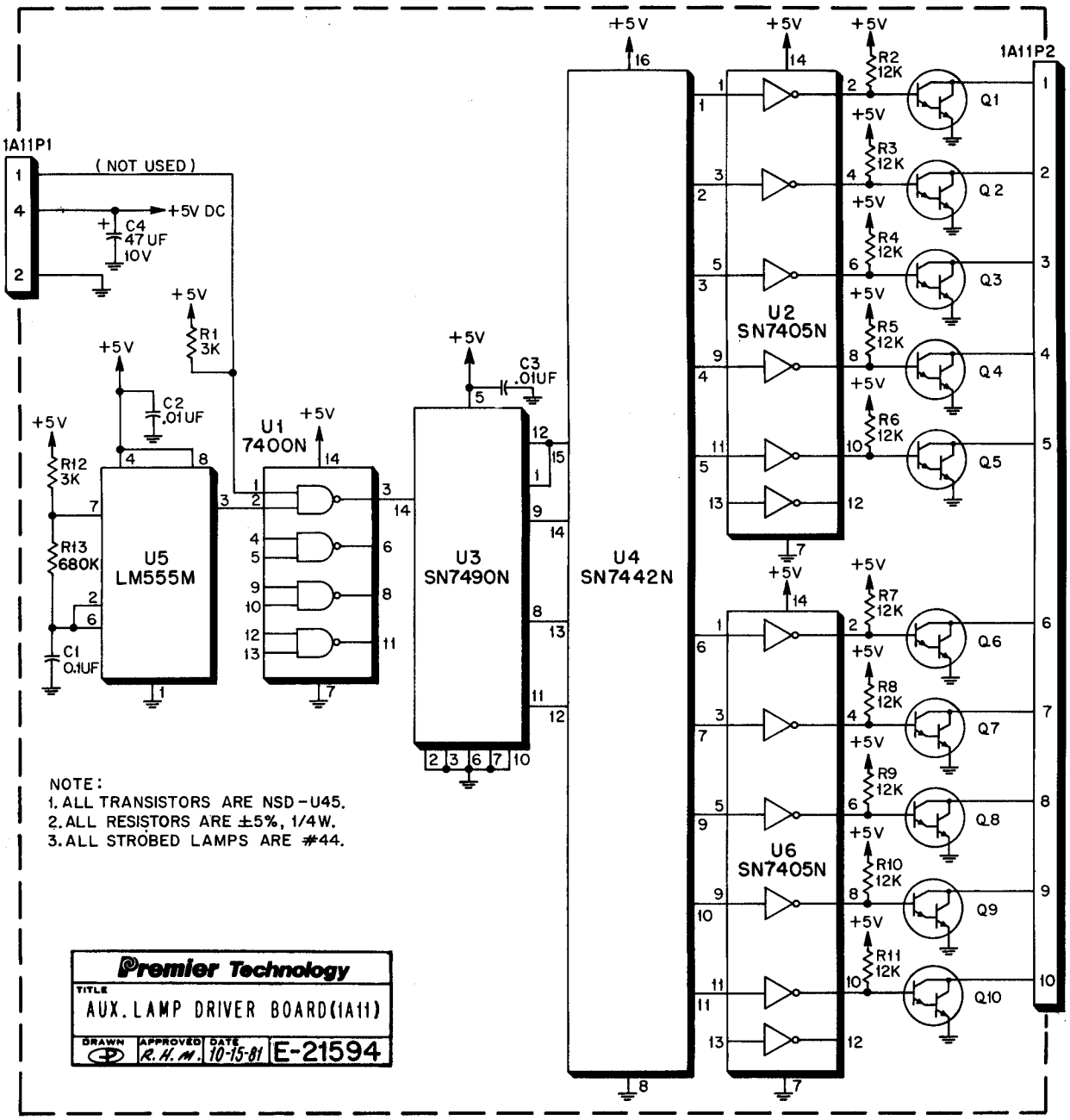

AUXILIARY LAMP DRIVER BOARD (A11) COMPONENT LOCATION

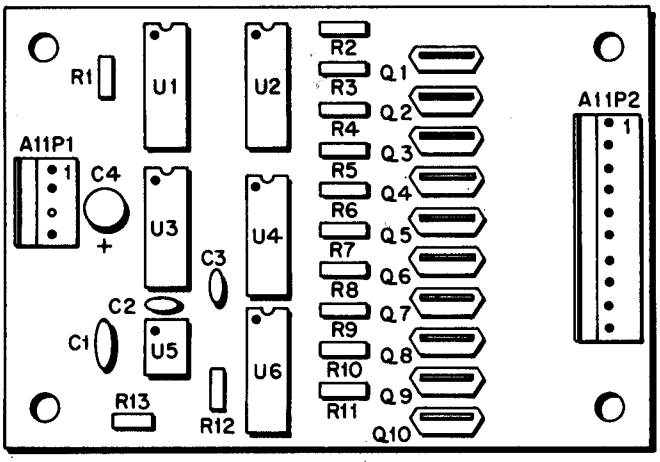

AUXILIARY LAMP DRIVER BOARD (A11) PARTS LIST

REFERENCE	DESCRIPTION	PART NUMBER
	AUXILIARY LAMP DRIVER ASSEMBLY	MA-789
C1	CAPACITOR, .1 MFD, 100V CERAMIC RADIAL LEAD	XO-626
C2-C3	CAPACITOR, .01 MFD, 100V RADIAL LEAD	XO-202
C4	CAPACITOR, 47 MFD, 10V ELECTROLYTIC RADIAL LEAD	XO-227
Q1-Q10	TRANSISTOR, NSD-U45 NPN DARLINGTON	XO-146
R1,R12	RESISTOR, 3K OHM, 5%, 1/4 W	XO-23
R2-R11	RESISTOR, 12K OHM, 5%, 1/4W	XO-9
R13	RESISTOR, 680K OHM, 5%, 1/4W	XO-669
U1	I.C. 2-INPUT NAND	XO-420
U2,U6	I.C. INVERTER	XO-403
U3	I.C. DECADE COUNTER	XO-425
U4	I.C. DECODER	XO-426
U5	I.C. TIMER	XO-631
P2	10 POS. CONNECTOR	XO-531
P1	4 POS. CONNECTOR	XO-532

X. WIRING AND SCHEMATIC DIAGRAMS, PARTS LISTS

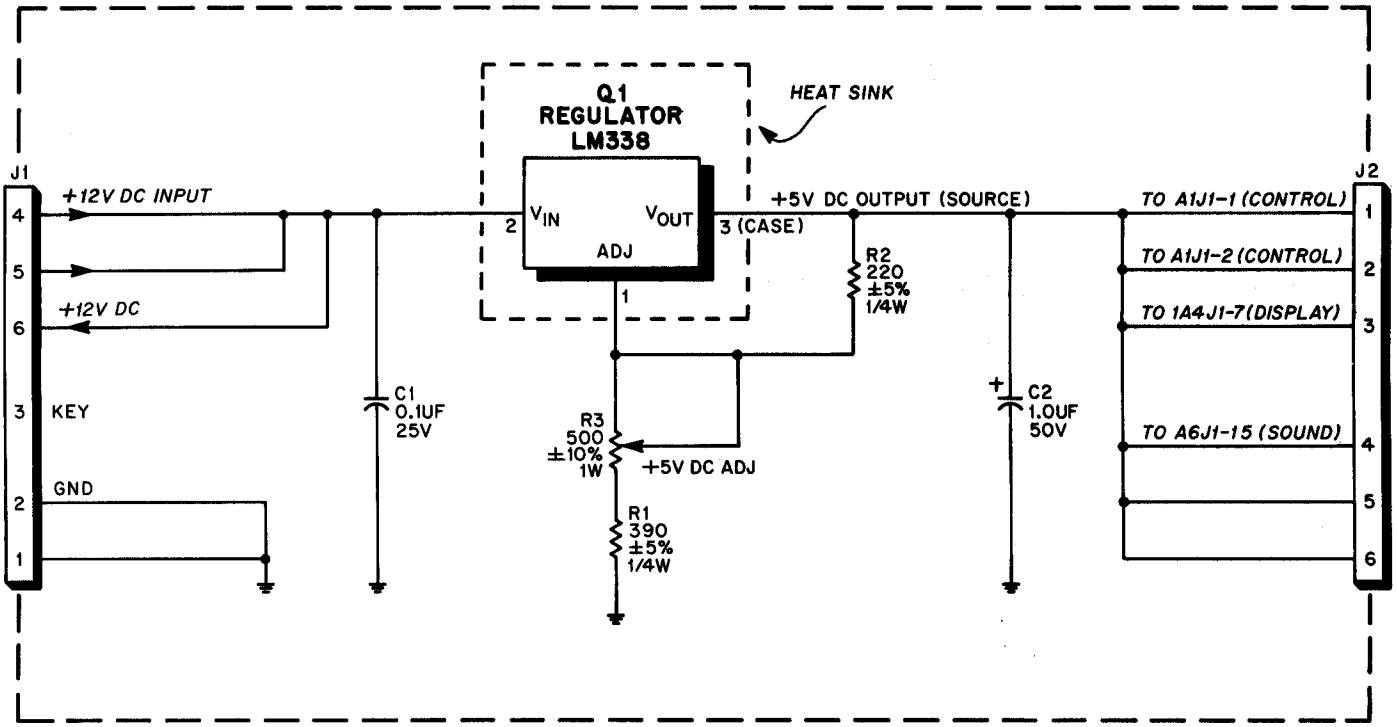

Premier Technology			
TITLE POWER SUPPLY (A2)			
USED ON			
DRAWN	APPROVED R.H.M.	DATE 12 FEB 85	E-24441

POWER SUPPLY (A2) COMPONENT LOCATION

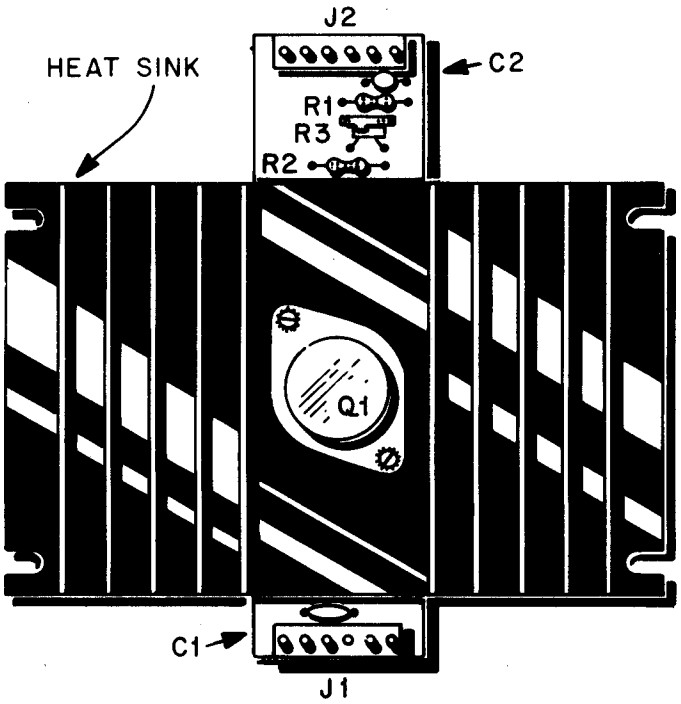

POWER SUPPLY (A2) PARTS LIST

REFERENCE	DESCRIPTION	PART NUMBER
	Power Supply (A2)	MA-831
C1	Capacitor, 0.1UF, +80% -20%, 25V	XO-248
C2	Capacitor, 1UF, 10%, 50V	XO-217
J1, J2	Connector, 6 Pin, Molex	XO-373
Q1	Regulator, LM338, (5 Amp)	XO-839
R1	Resistor, 390 ohm, 5%, 1/4W	XO-845
R2	Resistor, 220 ohm, 5%, 1/4W	XO-21
R3	Resistor, (Pot) 500 ohm, 10%, 1W	XO-112
	Heat Sink	XO-534
	Insulator, (Regulator)	XO-522
	Insulator, (Regulator)	XO-523

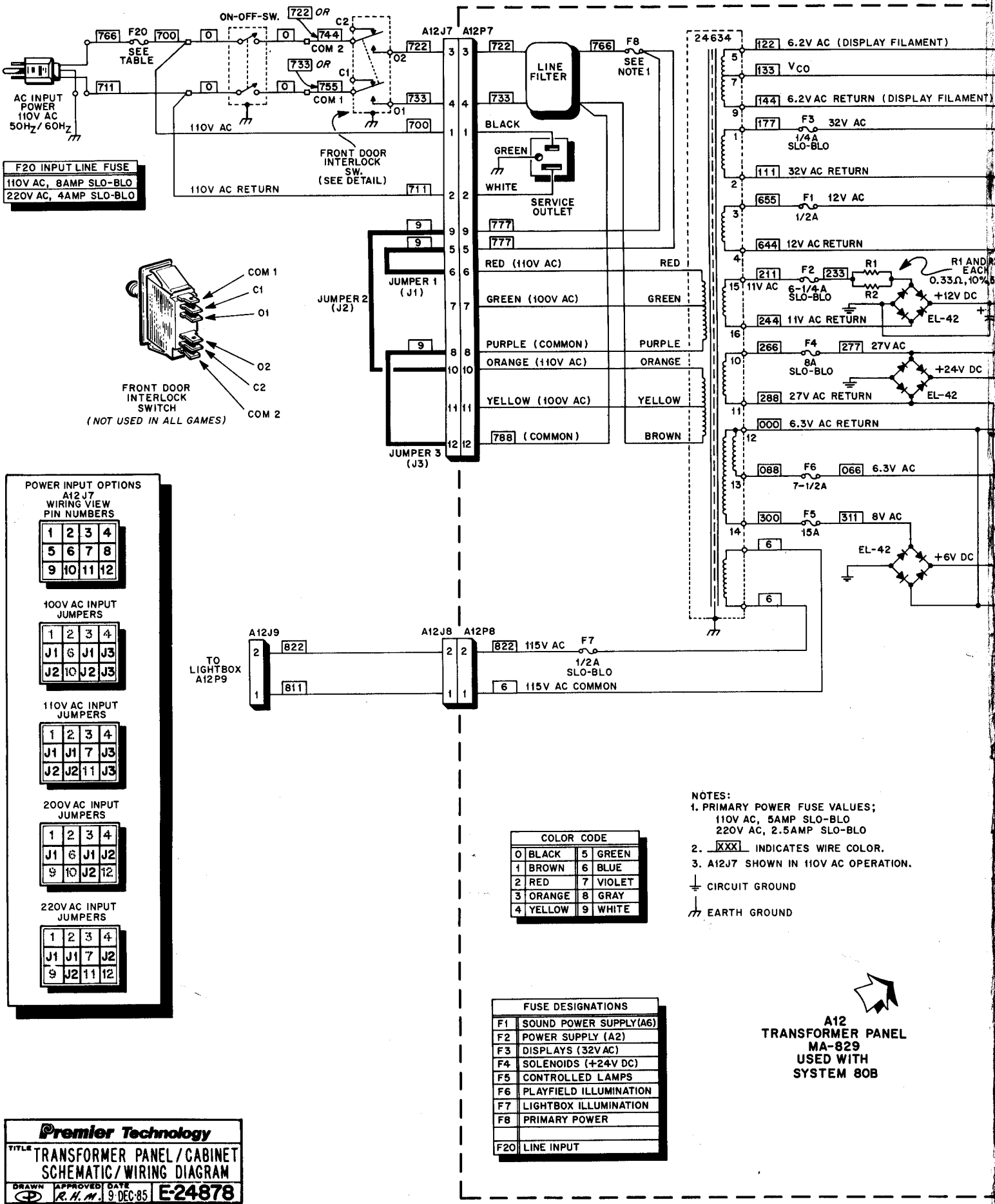

F20 INPUT LINE FUSE
110V AC, 8AMP SLO-BLO
220V AC, 4AMP SLO-BLO

COLOR CODE			
0	BLACK	5	GREEN
1	BROWN	6	BLUE
2	RED	7	VIOLET
3	ORANGE	8	GRAY
4	YELLOW	9	WHITE

FUSE DESIGNATIONS	
F1	SOUND POWER SUPPLY (A6)
F2	POWER SUPPLY (A2)
F3	DISPLAYS (32V AC)
F4	SOLENOIDS (+24V DC)
F5	CONTROLLED LAMPS
F6	PLAYFIELD ILLUMINATION
F7	LIGHTBOX ILLUMINATION
F8	PRIMARY POWER
F20	LINE INPUT

Premier Technology			
TITLE TRANSFORMER PANEL/CABINET SCHEMATIC/WIRING DIAGRAM			
DRAWN	APPROVED R.H.M.	DATE 9-DEC-85	E-24878

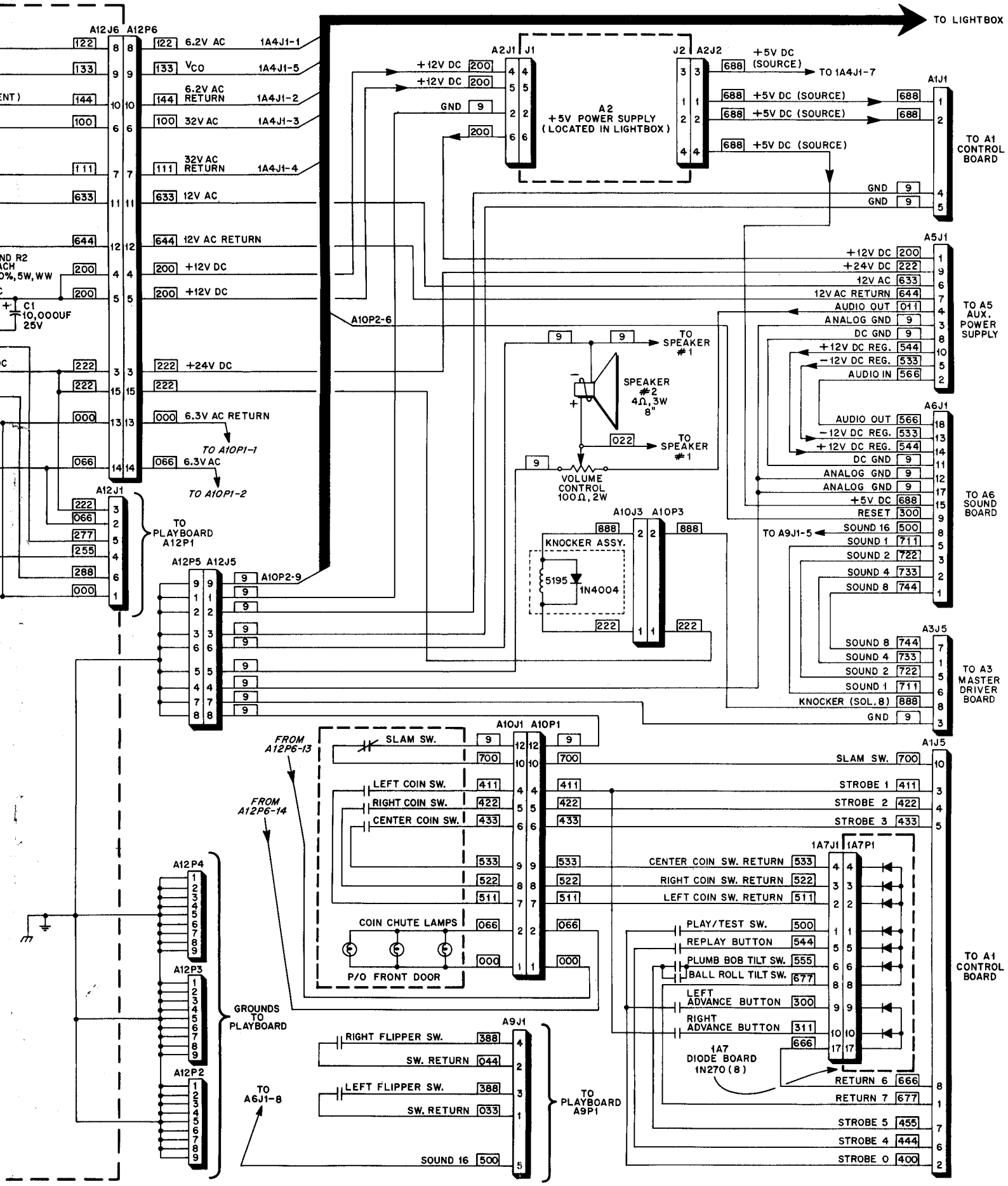
TO LIGHTBOX
A12J6 A12P6
122 6.2V AC 1A4J1-1
133 VCO 1A4J1-5
144 6.2V AC RETURN 1A4J1-2
100 32V AC 1A4J1-3
111 32V AC RETURN 1A4J1-4
633 12V AC
644 12V AC RETURN
200 +12V DC
222 +24V DC
000 6.3V AC RETURN
066 6.3V AC
TO A10P1-1
TO A10P1-2
C1 10,000UF 25V
A12J1
TO PLAYBOARD A12P1
A12P5 A12J5
A10P2-9
A10P2-6
A2J1 J1
+12V DC 200
GND 9
A2 +5V POWER SUPPLY (LOCATED IN LIGHTBOX)
J2 A2J2
+5V DC (SOURCE) 688
TO 1A4J1-7
A1J1
TO A1 CONTROL BOARD
A5J1
+12V DC 200
+24V DC 222
12V AC 633
12V AC RETURN 644
AUDIO OUT 011
ANALOG GND 9
DC GND 9
+12V DC REG. 544
-12V DC REG. 533
AUDIO IN 566
TO A5 AUX. POWER SUPPLY
A6J1
AUDIO OUT 566
-12V DC REG. 533
+12V DC REG. 544
DC GND 9
ANALOG GND 9
+5V DC 688
RESET 300
SOUND 16 500
SOUND 1 711
SOUND 2 722
SOUND 4 733
SOUND 8 744
TO A9J1-5
TO A6 SOUND BOARD
TO SPEAKER #1
SPEAKER #2 4Ω, 3W 8"
022
VOLUME CONTROL 100Ω, 2W
A10J3 A10P3
888
KNOCKER ASSY.
5195
1N4004
222
A3J5
SOUND 8 744
SOUND 4 733
SOUND 2 722
SOUND 1 711
KNOCKER (SOL. 8) 888
GND 9
TO A3 MASTER DRIVER BOARD
A10J1 A10P1
FROM A12P6-13
FROM A12P6-14
SLAM SW. 700
LEFT COIN SW. 411
RIGHT COIN SW. 422
CENTER COIN SW. 433
533
522
511
COIN CHUTE LAMPS 066
000
P/O FRONT DOOR
A1J5
SLAM SW. 700
STROBE 1 411
STROBE 2 422
STROBE 3 433
CENTER COIN SW. RETURN 533
RIGHT COIN SW. RETURN 522
LEFT COIN SW. RETURN 511
1A7J1 1A7P1
PLAY/TEST SW. 500
REPLAY BUTTON 544
PLUMB BOB TILT SW. 555
BALL ROLL TILT SW. 677
LEFT ADVANCE BUTTON 300
RIGHT ADVANCE BUTTON 311
666
1A7 DIODE BOARD 1N270 (8)
RETURN 6 666
RETURN 7 677
STROBE 5 455
STROBE 4 444
STROBE 0 400
TO A1 CONTROL BOARD
A12P4
A12P3
A12P2
GROUNDS TO PLAYBOARD
A9J1
RIGHT FLIPPER SW. 388
SW. RETURN 044
LEFT FLIPPER SW. 388
SW. RETURN 033
SOUND 16 500
TO A6J1-8
TO PLAYBOARD A9P1

XI. PARTS INFORMATION

TABLE OF CONTENTS

PAGE

PLAYBOARD PARTS
LAMPS AND SWITCHES..... 48

CABINET PARTS..... 49

PLAYBOARD PARTS
RUBBER RINGS AND MISCELLANEOUS PARTS..... 50

STARGATE RAMP ASSEMBLY
EXPLODED VIEW..... 51

HELICOPTER ASSEMBLY
EXPLODED VIEW..... 52

XI. PARTS INFORMATION

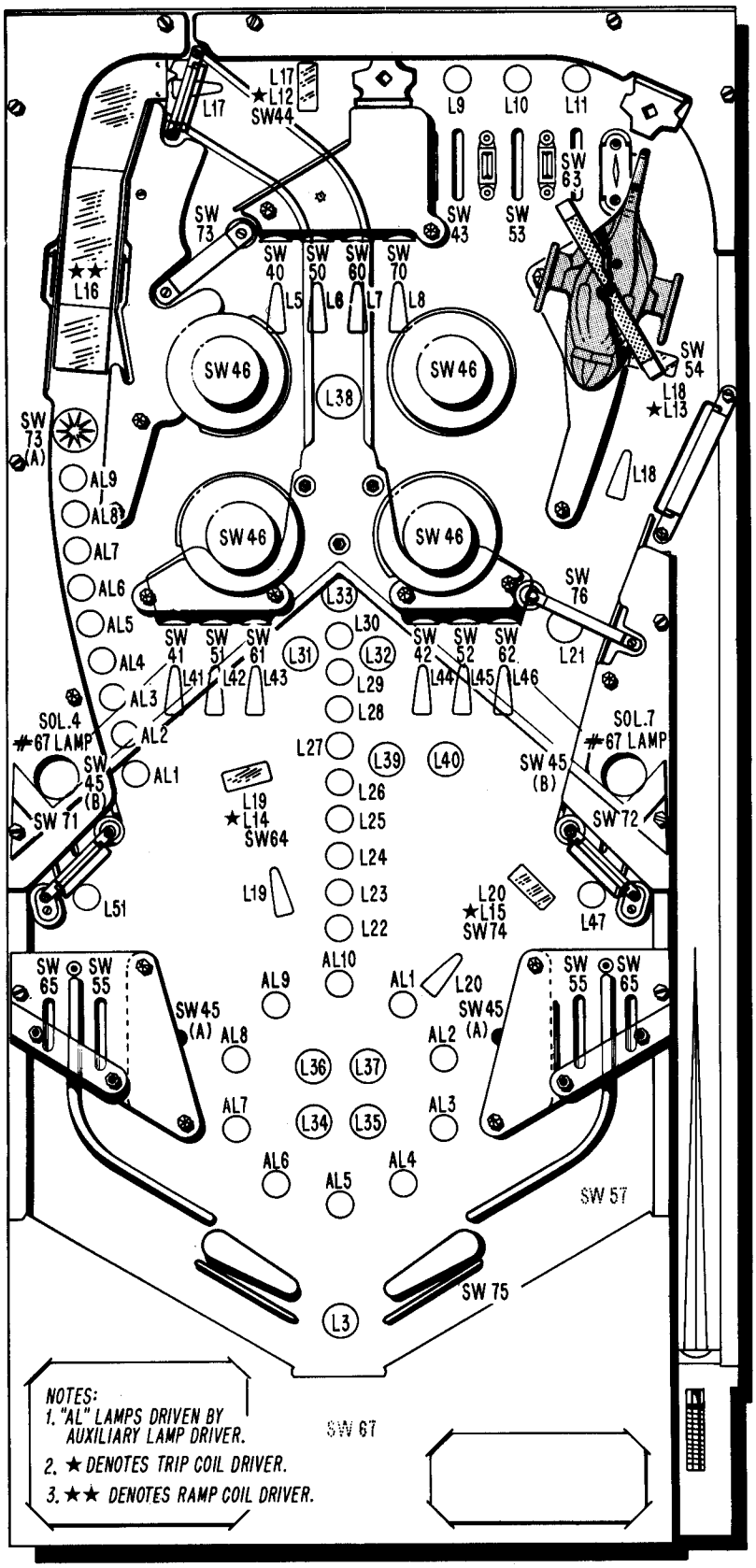

PLAYBOARD SWITCH AND LAMP ASSIGNMENTS

LAMP NUMBER	LAMP ASSIGNMENT
L3	Shoot Again
L5	#1 Top Spot Target
L6	#2 Top Spot Target
L7	#3 Top Spot Target
L8	#4 Top Spot Targat
L9	#1 Top Rollover
L10	#2 Top Rollover
L11	#3 Top Rollover
L17	Top Left Drop Target (2 Lamps)
L18	Top Right Drop Target (2 Lamps)
L19	Bottom Left Drop Target (2 Lamps)
L20	Bottom Right Drop Target (2 Lamps)
L21	Spinner
L22	1000
L23	2000
L24	3000
L25	4000
L26	5000
L27	6000
L28	7000
L29	8000
L30	9000
L31	10,000
L32	20,000
L33	30,000
L34	1X
L35	2X
L36	4X
L37	8X
L38	Special
L39	Extra
L40	Ball
L41	#1 Left Spot Target
L42	#2 Left Spot Target
L43	#3 Left Spot Target
L44	#1 Right Spot Target
L45	#2 Right Spot Target
L46	#3 Right Spot Target
L47	Right Side Rollover
L51	Left Side Rollover

SWITCH MATRIX NUMBER	SWITCH ASSIGNMENT	PART NO.
SW 40	#1 Top Spot Target (with Bracket)	20867
SW 41	#1 Left Spot Target (with Bracket)	20867
SW 42	#1 Right Spot Target (with Bracket)	20867
SW 43	#1 Top Rollover	18892
SW 44	Top Left Rollover Target	18095
SW 45(A)	Rubber Switch (2)	
	Contact Kicker and Bracket (4)	22224
	Contact Kicker (2)	18808
SW 45(B)	Rubber Switch (with Bracket) (2)	18078
SW 46	Pop Bumpers (with Bracket) (4)	21352
SW 50	#2 Top Spot Target (with Bracket)	20867
SW 51	#2 Left Spot Target (with Bracket)	20867
SW 52	#2 Right Spot Target (with Bracket)	20867
SW 53	#2 Top Rollover	18892
SW 54	Top Right Rollover Target	18095
SW 55	Return Rollovers (2)	18892
SW 57	Tilt (with Bracket)	9141
SW 60	#3 Top Spot Target (with Bracket)	20867
SW 61	#3 Left Spot Target (with Bracket)	20867
SW 62	#3 Right Spot Target (with Bracket)	20867
SW 63	#3 Top Rollover	18892
SW 64	Bottom Left Rollover Target	18095
SW 65	Outside Rollovers (2)	18892
SW 67	Outhole (Assembly)	18688
SW 70	#4 Top Spot Target (with Bracket)	20867
SW 71	Left Side Rollover	18892
SW 72	Right Side Rollover	18892
SW 73	Top Rollunder	21137
SW 73(A)	Star Rollover	19428
SW 74	Bottom Right Rollover Target	18095
SW 75	Right Flipper	22398
SW 76	Spinner (with Bracket)	19354

XI. PARTS INFORMATION

CABINET PARTS

ITEM	DESCRIPTION	PART NO.
1.	Cabinet	24928-702
2.	Lightbox Mounting Bracket (2)	19916
3.	Butt Hinge, (Shown For Reference Only, P/O Lightbox Assy.) (2)	22734
4.	"U" Bolt (P/O Lightbox)	24659
	Latch Assembly (P/O Cabinet)	21969
5.	Cable Assembly, Domestic (High Voltage)	MA-794
6.	Line Cord (Domestic)	23365
	Line Cord Cover Plate	21955
7.	Speaker, 4 Ohm, 3W, 8"	EL-83
	Speaker Guard	20931
8.	Prop Stick, Playfield	23940
9.	Flipper Switch Assembly (2)	17838
10.	Ball Shooter Assembly	8835
11.	Switch, On/Off	23799
	Switch Plate	18769
	Switch Housing	15163
12.	Front Door Assembly (Universal)	MA-688
	Cable Assembly	MA-676
	Slam Switch	FD-12
	6V DC Lamp, Wedge Base	FD-2
	Frame, Door	FD-13
	Three Chute Door	24160
	Black Button Bezel	FD-14
	Entry/Reject Button	FD-15
	Button Spring	FD-16
	Reject Flap	FD-17
	Clamp, Frame	FD-18
	Flat Lock and Cam Assembly	FD-19
	Base Plate with Pivot and Stud	FD-20
	Microswitch Bracket	FD-21
	Clear Plastic Cover for Microswitch	FD-22
	Coin Microswitch with Wire	FD-23
	Lampholder	FD-24
	Black Reject Bezel	FD-26
13.	Replay Switch Assembly	18092
14.	Interlock Switch Assembly (When Used)	24148
	Switch	EL-66
	Switch Cover	21888
15.	Cashbox	24867
	Cover	24868
	Dividers	24869
	Locator	24151
	Lockeye Assembly	23878
	Liner (Small) (3)	24870
	Liner (Large) (2)	24871
16.	Plumb Bob Tilt Switch Assembly	
	Strike Plate	358
	Carbon, Tilt Bob	MH-30
	Rod, Tilt	357
17.	Locator Bracket	18578
18.	Diode Assembly	24252
	Diode, 1N270 (8)	XO-265
19.	Knocker Assembly	MA-12
20.	Cabinet Leg (4) (Black)	4337Y
	Leg Bolt (8)	3775
	3" Leg Adjuster (4)	MH-21
21.	Transformer Panel Assembly	MA-829
	Bridge Rectifier (3)	EL-42
	Cable Assembly (Secondary)	MA-812
	Capacitor, 10,000UF, 25V	XO-830
	Filter, Line	EL-50
	Fuse Block (6 Pos.)	EL-12
	Fuse Cover	23805
	Fuse Holder (F7 and F8) (2)	EL-78
	Fuses	
	F1, 1/2 Amp	EL-28
	F2, 6-1/4 Amp, SLO-BLO	EL-29
	F3, 1/4 Amp, SLO-BLO	EL-5
	F4, 8 Amp, SLO-BLO	EL-26
	F5, 15 Amp	EL-25
	F6, 7-1/2 Amp	EL-22
	F7, 1/2 Amp, SLO-BLO	EL-20
	F8, 5 Amp, SLO-BLO (110V AC)	EL-8
	F8, 2.5 Amp, SLO-BLO (220V AC)	EL-21
	Ground Bus Assembly (2)	24542
	Outlet, Service	18133
	Resistor, 0.33 Ohm, 10% 5W, Wire-Wound (2)	XO-154
	Transformer	24634
22.	Fuse Holder	EL-78
	F20, 8 Amp, SLO-BLO (110V AC)	EL-26
	F20, 4 Amp, SLO-BLO (220V AC)	EL-33

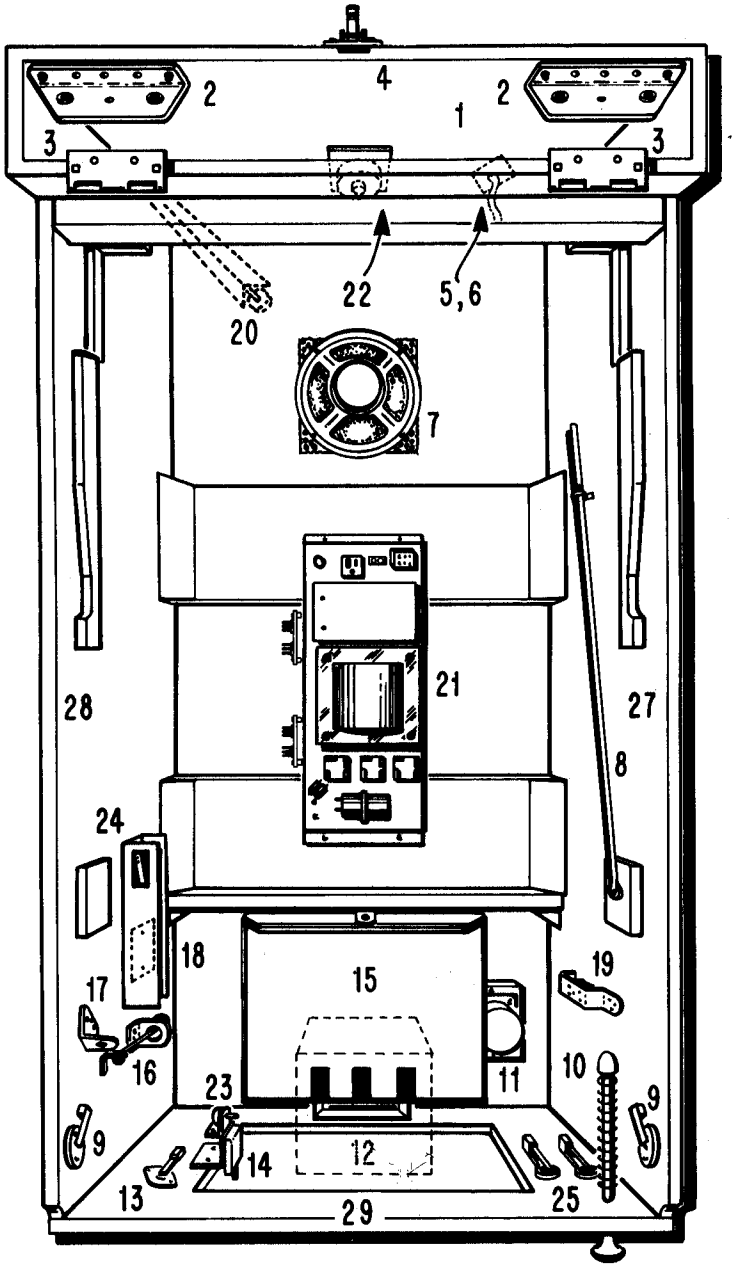

ITEM	DESCRIPTION	PART NO.
23.	Mounting Bracket	24149
	Control, Volume, 100 Ohm, 2W	XO-199
	Switch, PLAY/TEST	EL-57
24.	Ball Roll Tilt	
	Housing and Switch Assembly	24394
	Switch	24393
25.	Button Holder and Switch (2)	23503
	Pushbutton (2)(Black)	24293Y
26.	Lightbox (Not Shown)	24645-702
27.	Front Moulding, Right (Black) (Not Shown)	22735Y
28.	Front Moulding, Left (Black) (Not Shown)	22736Y
29.	Front Moulding, (Black) (Not Shown)	16951Y

XI. PARTS INFORMATION

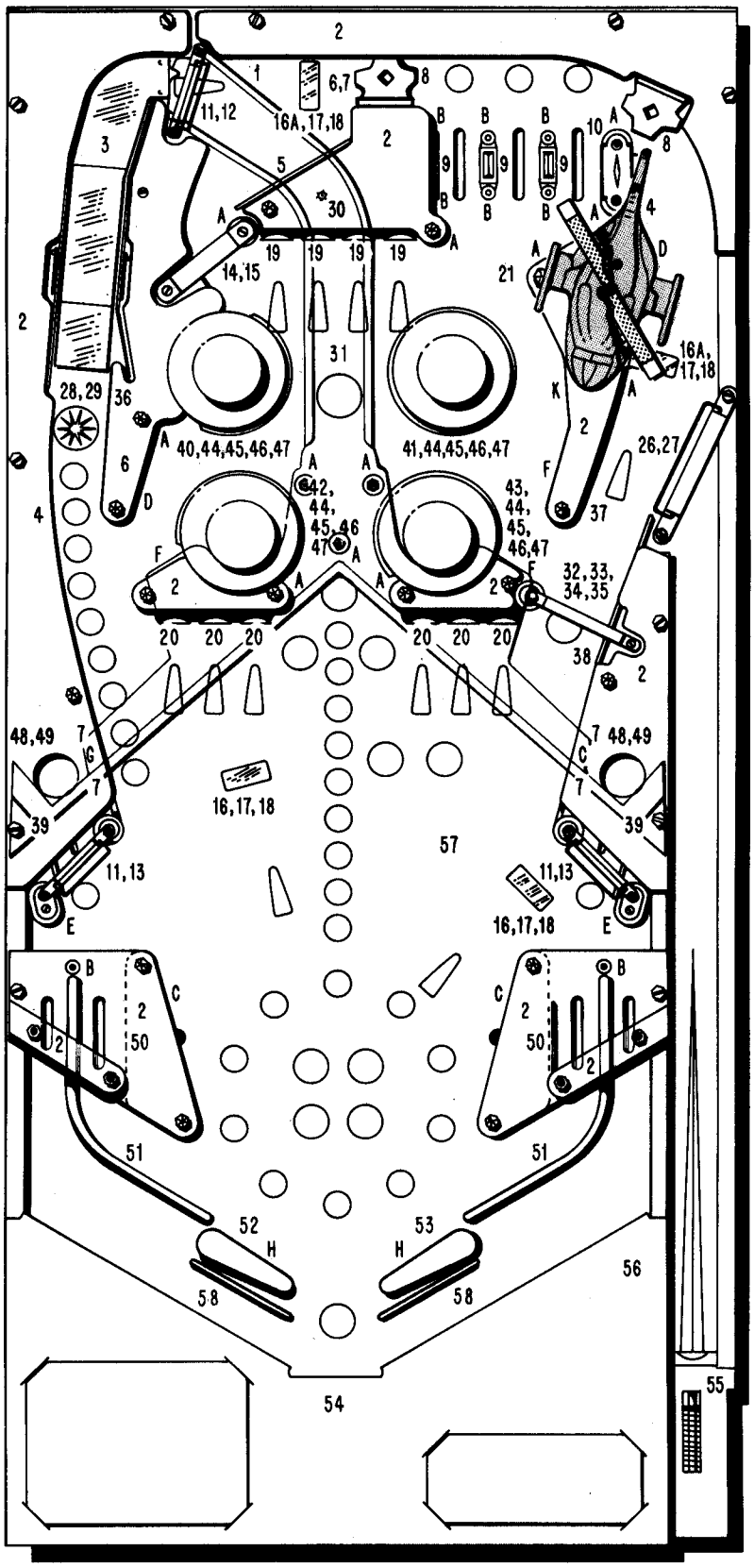

PLAYBOARD PARTS INFORMATION

RUBBER RINGS

ITEM	DESCRIPTION	PART NO.
A	5/16" (11)	10217
B	Mini-Post (9)	15705
C	2-1/2" (3)	10222
D	1-1/2" (2)	10220
E	7/16" (2)	17493
F	1" (3)	10219
G	2"	10221
H	Flipper Red (2)	13151
J	3/4"	10218

PARTS LIST

ITEM	DESCRIPTION	PART NO.
1	Flat Rail	24882
2	Plastic Shield Set	24895
3	Stargate Ramp Assembly (See Exploded View Illustration)	
4	Ball Guide Rail (2)	19331
5	Ball Guide Rail	13782
6	Ball Guide Rail (2)	17650
7	Ball Guide Rail (5)	18070
8	Arch Rebound Assembly (2)	19645
9	Rollover Guide (Green) (3)	15646S
10	Guide Rail (Green)	9393S
11	Metal Shield (3)	17300
12	Gate Wireform	17299
13	Gate Wireform (2)	22112
14	Metal Shield	4705
15	Gate Wireform	21958
16	Three Position Target Bank (Left) (2)	MA-729
16A	Three Position Target Bank (Right) (2)	MA-822
17	Target Decal (4)	24903
18	Rollover Target (4)	20892P
19	Spot Target (Yellow) (4)	24794
20	Spot Target (Red) (6)	24794
21	Helicopter (See Exploded View Illustration)	
26	Metal Shield	1673
27	Gate Wireform	1674
28	Star Rollover Insert (Red)	11966U
29	Rollover Button (White)	11968Z
30	Ramp Spacer	MP9
31	Molded Ramp	24884
32	Target Shield	14043
33	Spinning Target Assembly	24494
34	Spinning Target Rod	20406
35	Nylon Washer (2)	20407
36	Ball Guide Rail	4833
37	Ball Guide Rail	6612
38	Ball Guide Rail	18563
39	Ball Guide Rail (2)	4832
40	Pop Bumper Trim Platter	24892
41	Pop Bumper Trim Platter	8246
42	Pop Bumper Trim Platter	24891
43	Pop Bumper Trim Platter	24890
44	Pop Bumper Skirt (Yellow) (4)	10433T
45	Pop Bumper Body and Socket (Yel.)(4)	MA-243
46	Pop Bumper Cap (Yellow) (4)	10434T
47	Pop Bumper Decal (4)	24902
48	#67 Lamp (2)	LA5
49	#67 Lamp Socket (2)	24881
50	Ball Guide Rail (2)	3722
51	Ball Guide Rail (2)	23833
52	Left Flipper Unit	MA-91
53	Right Flipper Unit	MA-321
54	Card Holder	13647-702
55	Ball Shooter Gauge	9767-702
56	Ball Return Unit Assembly	21622
57	Mylar Overlay	24893
58	Ball Snubber Rail (2)	13798
	"Q" Relay Assembly	MA-23
	"T" Relay Assembly	MA-25
	"A" Motor Relay Assembly	MA-833
	Plastic Support Post (5)	20635P
	1" Plastic Post (31)	11561P
	Siamese Post (2)	17492
	Split Post Base (3)	14487Z
	Split Post Cap (3)	14488Z

XI. PARTS INFORMATION

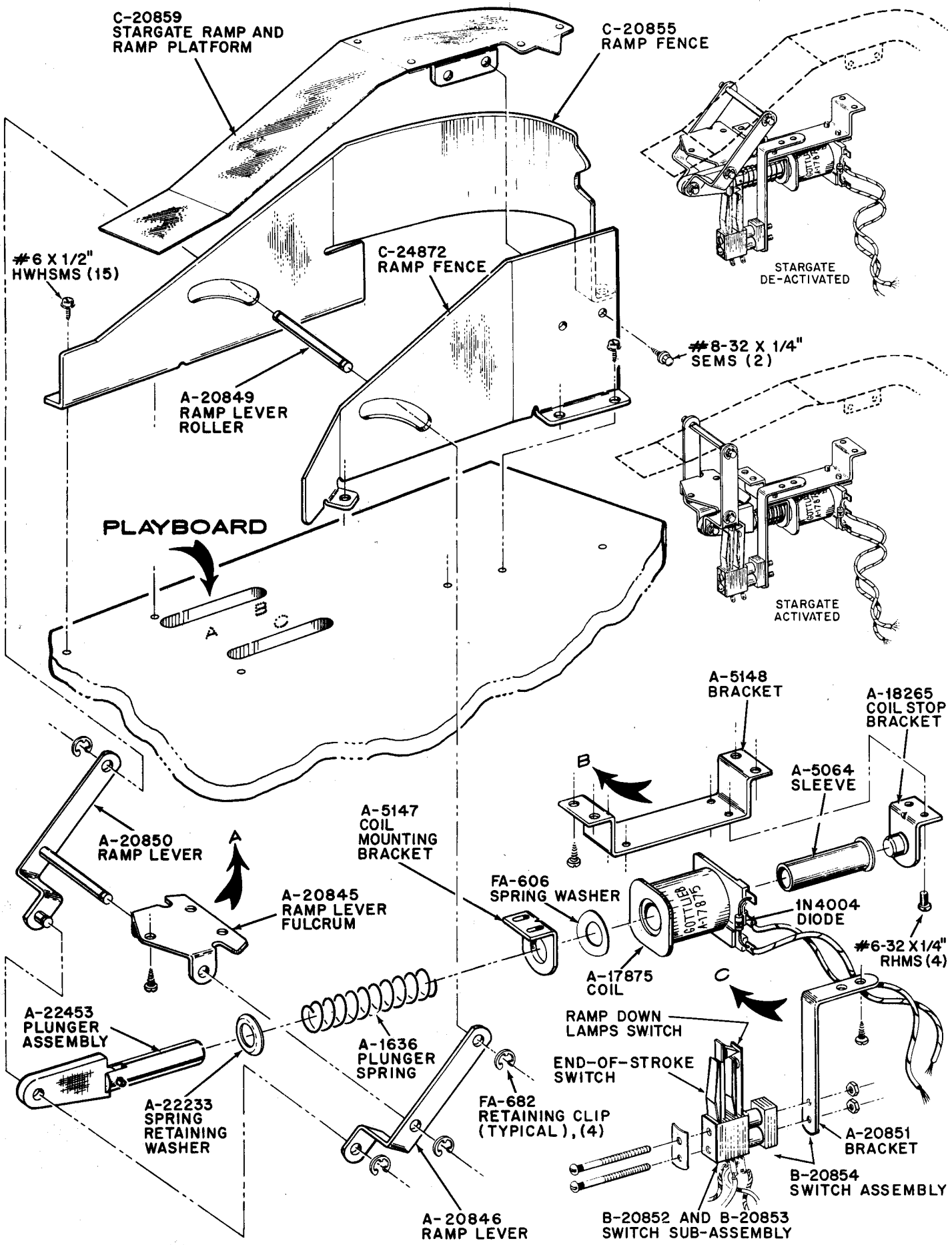

XI. PARTS INFORMATION

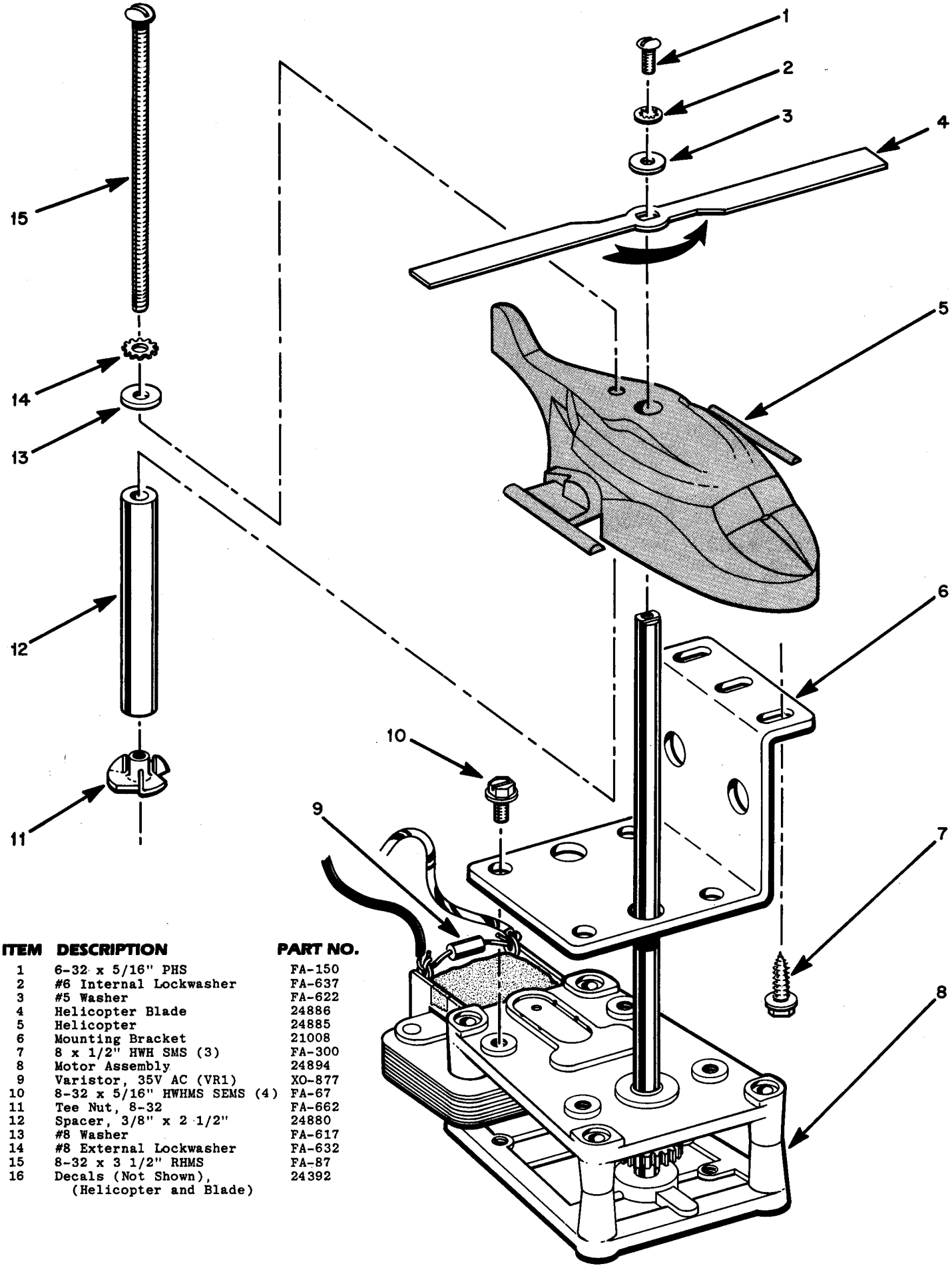

ITEM	DESCRIPTION	PART NO.
1	6-32 x 5/16" PHS	FA-150
2	#6 Internal Lockwasher	FA-637
3	#5 Washer	FA-622
4	Helicopter Blade	24886
5	Helicopter	24885
6	Mounting Bracket	21008
7	8 x 1/2" HWH SMS (3)	FA-300
8	Motor Assembly	24894
9	Varistor, 35V AC (VR1)	XO-877
10	8-32 x 5/16" HWHMS SEMS (4)	FA-67
11	Tee Nut, 8-32	FA-662
12	Spacer, 3/8" x 2 1/2"	24880
13	#8 Washer	FA-617
14	#8 External Lockwasher	FA-632
15	8-32 x 3 1/2" RHMS	FA-87
16	Decals (Not Shown), (Helicopter and Blade)	24392

Premier
Technology
759 INDUSTRIAL DRIVE
BENSENVILLE, IL 60106
(312) 350-0400
TELEX 215009 PRMR UR

©1986 Premier Technology
All Rights Reserved
Printed in U.S.A.

1-86